DeVILBISS

AUTOMOTIVE REFINISHING

EUROPEAN / EXPORT
PRODUCT CATALOGUE



facebook.com/DeVilbissInternational

Instagram: @devilbiss_refinish

youtube.com/DevilbissEurope

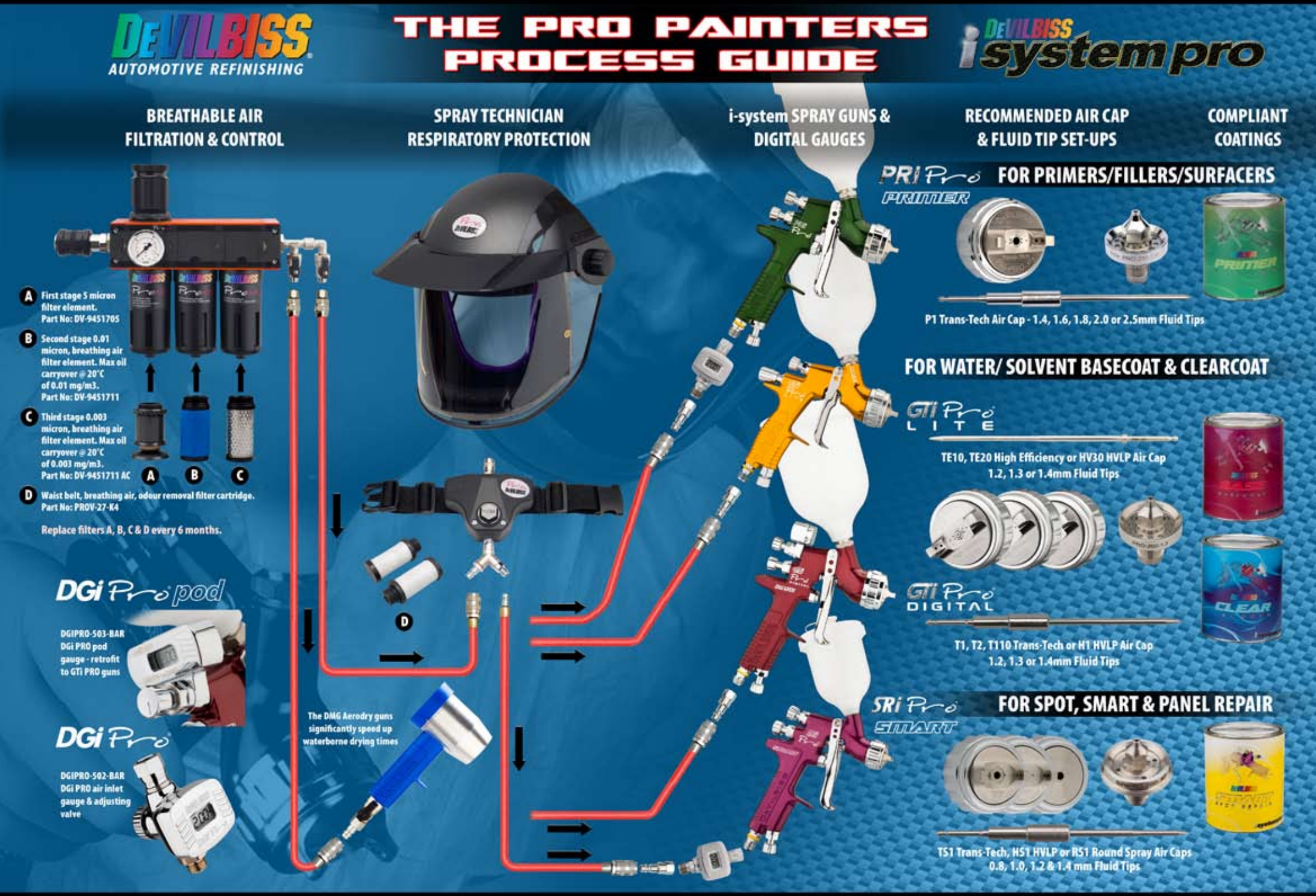
DEVILBISS
AUTOMOTIVE REFINISHING
THE PRO PAINTERS PROCESS GUIDE
DEVILBISS i system pro
BREATHABLE AIR FILTRATION & CONTROL
SPRAY TECHNICIAN RESPIRATORY PROTECTION
i-system SPRAY GUNS & DIGITAL GAUGES
RECOMMENDED AIR CAP & FLUID TIP SET-UPS
COMPLIANT COATINGS
A First stage 5 micron filter element. Part No: DV-9451705
B Second stage 0.01 micron, breathing air filter element. Max oil carryover @ 20°C of 0.01 mg/m3. Part No: DV-9451711
C Third stage 0.003 micron, breathing air filter element. Max oil carryover @ 20°C of 0.003 mg/m3. Part No: DV-9451711 AC
D Waist belt, breathing air, odour removal filter cartridge. Part No: PROV-27-K4
Replace filters A, B, C & D every 6 months.
DGi Pro pod
DGIPRO-503-BAR DGi PRO pod gauge - retrofit to GTi PRO guns
DGi Pro
DGIPRO-502-BAR DGi PRO air inlet gauge & adjusting valve
The DMG Aerodry guns significantly speed up waterborne drying times
PRi Pro PRIMER
FOR PRIMERS/FILLERS/SURFACERS
P1 Trans-Tech Air Cap - 1.4, 1.6, 1.8, 2.0 or 2.5mm Fluid Tips
FOR WATER/ SOLVENT BASECOAT & CLEARCOAT
GTi Pro LITE
TE10, TE20 High Efficiency or HV30 HVLP Air Cap 1.2, 1.3 or 1.4mm Fluid Tips
GTi Pro DIGITAL
T1, T2, T110 Trans-Tech or H1 HVLP Air Cap 1.2, 1.3 or 1.4mm Fluid Tips
SRi Pro SMART
FOR SPOT, SMART & PANEL REPAIR
TS1 Trans-Tech, HS1 HVLP or RS1 Round Spray Air Caps 0.8, 1.0, 1.2 & 1.4 mm Fluid Tips

Index

GTi Pro LITE....4 - 5
GTi Pro HVLP and Trans-Tech Spray Guns....6 - 7
PRi Pro Trans-Tech Gravity Feed Primer Spray Gun....8 - 9
SRi Pro LITE and MICRO....10 - 11
SRi Pro HVLP Spot Repair Gravity Feed Spray Gun....12 - 13
GPi....14 - 15
GFG Pro Conventional Gravity Feed Spray Gun....16 - 17
FLG-5 General Purpose Gravity and Suction Feed Spray Guns....18 - 19
DAGR Airbrush....20 - 21
GTi Pro Compliant Suction and Pressure Feed Spray Guns....22 - 23
GTi Pro LITE Suction and Pressure Feed Spray Guns....24 - 25
JGA Pro Conventional Suction and Pressure Feed Spray Guns....26 - 27
Startingline Gun....28
Pro Clean....29
Shim Mask....30
DMG Air Dryer Guns and Systems....31
DGi Pro Gauges....32
DeKups....33
CLEAN Range....34 - 35
Pro Visor....36 - 37
MPV-627 Air Fed Half Mask Outfit....38 - 39
Valuair and Freedom Half Mask Respirators....40
ProAir-1 Filter Regulator....41
ProAir-2 Filter Regulator Coalescer....42
ProAir-3 Filter Regulator....43
Finishline Economy Regulators....44
Gun Spares....45
Accessories - Gravity and Suction Cups....46
Accessories - Spray Gun....47 - 48
Accessories - Hoses and Connections....49
KBII 2.3 Litre Remote Cup....50 - 51
DX Pumps....52 - 53
MXL Pumps....54 - 55
Binks Pressure Feed Tank....56 - 57
DVFR Filter Regulators....58 - 59
CVi....60
GTiW / GTiG / PRi....61
GTiP / GTiS....62
SRi / SRiW....63
VRiS & P / VRiG....64 - 65
JGAS....66
GFG....67
MPV-623....68
MPV-616....69
Data Sheets....70 - 95
Conditions of Sale....96 - 98
ATEX....99

GTi Pro LITE by DeVILBISS



- **A lightweight DeVilbiss spray gun developed for busy professional painters needing the ultimate in quality finishes.**
- **Range of four advanced technology air caps (one HVLP and three High Efficiency) for optimum application performance with the latest solvent and waterborne coatings.**
- **Ergonomic gun body design with even better fit and balance for comfort and control.**
- **Four high efficiency fluid tips provide superb versatility across a range of climatic conditions and viscosities.**
- **Coaxial, low kick air valve design gives smoother feel for even greater air and paint control for ease of fade-outs and blend-ins.**

Part Number Explanation

PROL	-	TE10	-	B	-	13
Model		Air Cap		Base		Fluid Tip



HV30 HVLP Air Cap



TE10 High Efficiency Air Cap



TE20 High Efficiency Air Cap

T110 High Efficiency Air Cap

Specification

Air Inlet Pressure	2.0 bar (29psi) for TE Caps 1.75 bar (25 psi) for HV Cap
Air Consumption	TE10: 270 l/min (9.5 cfm) TE20: 360 l/min (12.7 cfm) HV30: 460 l/min (16.3 cfm) T110: 265 l/min (9.4 cfm)
Air Inlet Thread	1/4" Universal

Cup Capacity	560 mls
Weight (gun only)	446 gms
Weight (gun & cup)	620 gms
Air Cap	Plated Brass
Air Cap Retaining Ring	Clear Anodised Aluminium
Fluid Tip	Stainless Steel
Fluid Needle	Stainless Steel

GTi Pro LITE Spray Gun Kits

When ordering please specify the air cap of your choice (HV30, TE10, TE20, T110), the tip size of your choice (12, 13 or 14) and the paint type marking required on your gun B=BASE, C=CLEAR.

Part No Examples	Description
PROL-TE10C-13	GTi Pro LITE kit with TE10 High Efficiency air cap, #13 fluid tip, marked as "Clear"
PROL-HV30B-D-12	Digital GTi Pro LITE kit with HV30 High Efficiency air cap, #12 fluid tip, marked as "Base"

Kit includes GTi Pro LITE gun, gravity cup, paint filter, brush, torx key, set of 4 identification rings and combination spanner

Accessories

Part No	Description
PRO-102-HV30-K	HV30 HVLP Air Cap and retaining ring
PRO-102-TE10-K	TE10 High Efficiency Air Cap and retaining ring
PRO-102-TE20-K	TE20 High Efficiency Air Cap and retaining ring
PRO-102-T110-K	T110 High Efficiency Air Cap and retaining ring
PROL-455-****-**	Air cap, fluid tip and needle kit
PRO-200-**-K	Fluid Tip - Size Numbers 12, 13 & 14
PRO-301-K	Pro LITE Fluid Needle
PRO-470	Spray Gun Service/Repair Kit
SN-406	Gun wrench, Torx & flat back screwdriver, cleaning brush and colour ID rings
DGIPRO-502-BAR	Digital gauge for air inlet fitting - Reads in bars
DGIPRO-504-BAR-K	Digital gauge for spreader valve assembly for GTi Pro LITE - reads in bars
MPV-60-K3	Pack of three male quick detach uni swivel - fits to gun air inlet
HAF-507-K12	Lightweight in-line air filter (pack of 12)
4900-5-1-K3	Pack of three cleaning brushes
KGP-5-K5	Pack of 5 gravity cup filters for GFC cups



KGP-5-K5



4900-5-1-K3



MPV-60-K3



HAF-507-K12



PRO-470

**** = Air Cap
** = Fluid tip size

PRO-470 Repair Kit includes:	
Packing, Spring & Packing Nut	SN-404
Trigger Stud & Screw*	
Spray Head Seal	SN-18-1
Seal and Pin Kit	GTI-428-K5
Needle Spring	PRO-472
*Not sold separately	

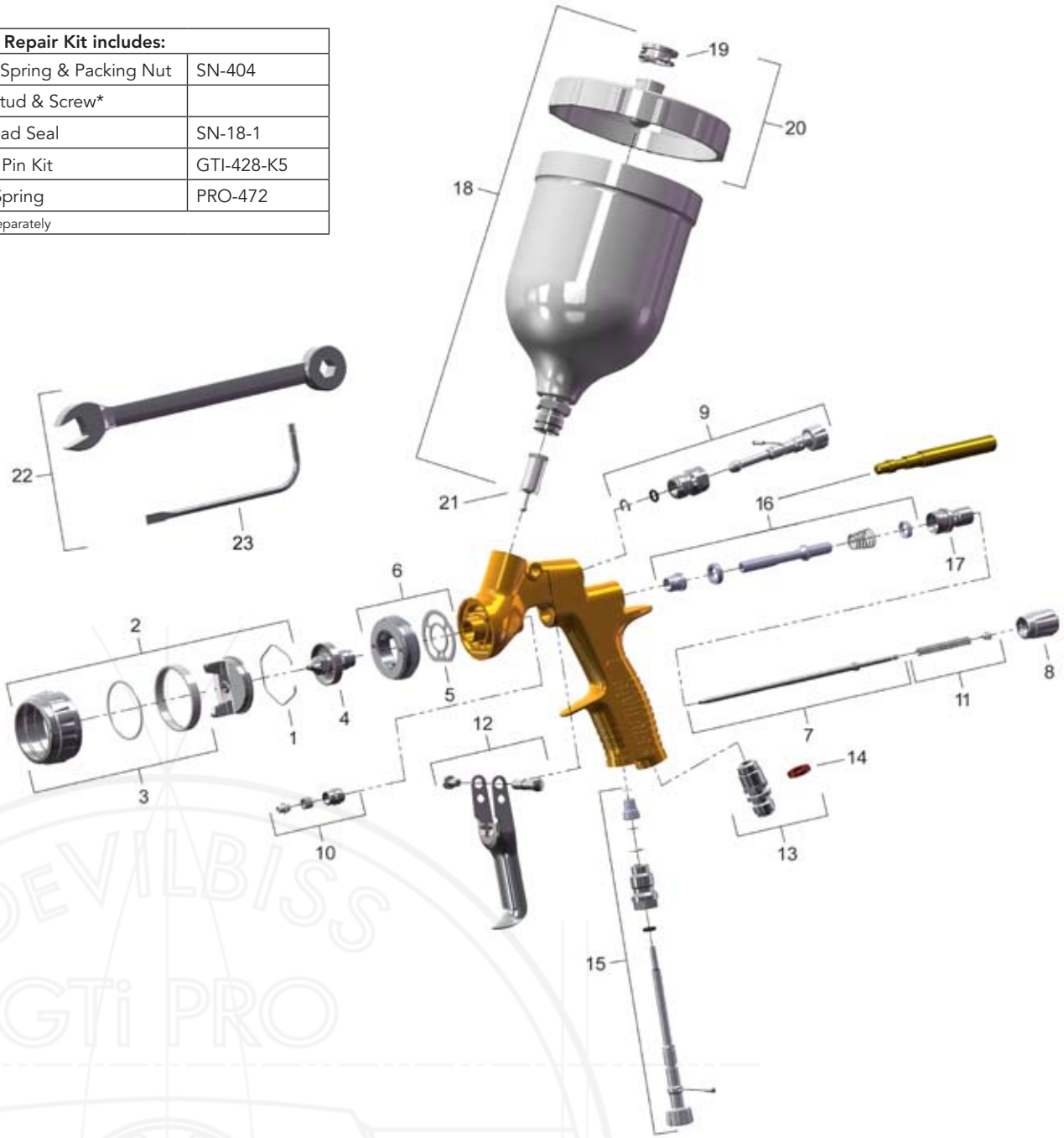

Ref No	Description	Part Number
1	Air Cap Retaining Clip	JGA-156-K5
2	TE10 High Efficiency Air Cap & Ring	PRO-102-TE10-K
	TE20 High Efficiency Air Cap & Ring	PRO-102-TE20-K
	HV30 HVLP Air Cap & Ring	PRO-102-HV30-K
	T110 High Efficiency Air Cap & Ring	PRO-102-T110-K
3	Air Cap Retaining Ring & Seals	PRO-420-K
4	Fluid Tip 12, 13 or 14	PRO-200**-K
5	Spray Head Seal (kit of 2)	SN-18-1-K2
6	Spray Head & Seal Kit	SN-69-K
7	Fluid Needle	PRO-301-K
8	Fluid Adjusting Knob	SN-67-C-K
9	Spreader Valve Assembly	PRO-406-K
10	Packing, Spring & Packing Nut Kit	SN-404-K

Ref No	Description	Part Number
11	Needle Spring Kit	PRO-472-K3
12	Trigger, Stud & Screw Kit	SP-617-CR-K
13	Air Inlet	SN-9-K
14	Colour ID Ring Kit (4 Colours)	SN-26-K4
15	Airflow Valve (Cheater)	PRO-407-K
16	Air Valve Kit	PRO-471
17	Body Housing	SN-66-K
18	Gravity Cup Kit	GFC-501
19	Drip Check Lid (kit of 5)	GFC-2-K5
20	Gravity Cup Lid	GFC-402
21	Filter	KGP-5-K5
22	Torx Key & Spanner	SN-406
23	Torx Key	SPN-8-K2

GTi Pro by DeVILBISS

HIGH PERFORMANCE, BASE AND CLEARCOAT TECHNOLOGY SPRAY GUNS



- **The gun can be purchased with or without the DGi Pro pod Digital gauge factory fitted (this gauge can also be retrofitted to standard guns).**
- **Four advanced technology air caps (one HVLP and three Trans-Tech) for optimum application performance with the latest solvent and waterborne coatings.**
- **Ergonomic gun body design with even better fit and balance for comfort and control.**
- **Ultra high flow fluid tips provide superb versatility across a range of viscosities.**
- **Revolutionary air valve design gives smoother feel for even greater air and paint control for ease of fade-outs and blend-ins.**
- **Simplified, user friendly components provide easy cleaning and maintenance.**

Part Number Explanation

GTIPRO	-	T1	-	B	-	D	-	13
Model		Air Cap		Base		Digital Models		Fluid Tip



No H1 HVLP Air Cap



No T1 Trans-Tech Air Cap



No T2 Trans-Tech Air Cap

No T110 Trans-Tech Air Cap

Specification

Air Inlet Pressure	2.0 bar (29psi)
Air Consumption	T1: 280 l/min (9.9 cfm) T2: 350 l/min (12.4 cfm) H1 450 l/min (15.9 cfm) T110: 265 l/min (9.4 cfm)
Air Inlet Thread	1/4" Universal

Cup Capacity	560 mls
Weight (gun & cup)	768 gms
Digital Weight (gun & cup)	823 gms
Air Cap & Ring	Plated Brass
Fluid Tip	Stainless Steel
Fluid Needle	Stainless Steel



DGIPRO-503-BAR-K

GTi Pro Spray Gun Kits

When ordering please specify the air cap of your choice (H1, T1 or T2), the tip size of your choice (12, 13 or 14) and the paint type marking required on your gun B=BASE, C=CLEAR and add in a –D if you require the gun complete with digital pod gauge.

Part No Examples	Description
GTIPRO-T1C-13	Gun with a T1 Trans-Tech air cap, a #13 fluid tip and marked as "CLEAR"
GTIPRO-H1B-D-12	Digital Gun with a H1 HVLP air cap, a #12 fluid tip and marked as "BASE"

Kit includes GTi PRO Gravity gun, cup, paint filter, brush, set of 4 identification rings and combination spanner



MPV-60-K3

Accessories

Part No	Description
PRO-100-H1-K	H1 HVLP Air Cap and retaining ring
PRO-100-T1-K	T1 Trans-Tech Air Cap and retaining ring
PRO-100-T2-K	T2 Trans-Tech Air Cap and retaining ring
PRO-100-T110-K	T110 Trans-Tech Air Cap and retaining ring
PRO-450-***-**	Air cap, fluid tip and needle kit
PRO-200-**-K	Fluid Tip - Size Numbers 12, 13 & 14
PRO-300-K	Fluid Needle
PRO-415-1	Spray Gun Service/Repair Kit
SN-406	Gun wrench, Torx & flat back screwdriver, cleaning brush and colour ID rings
DGIPRO-502-BAR	Digital Gauge - Reads in bars
DGIPRO-503-BAR-K	Digital gauge for spreader valve assembly for GTi Pro - reads in bars
MPV-60-K3	Male Quick Detach Uni Swivel - fits to gun air inlet
HAF-507-K12	Lightweight in-line air filter (pack of 12)
4900-5-1-K3	Pack of three cleaning brushes
KGP-5-K5	Pack of 5 gravity cup filters for GFC cups
PRO-15-K3	ProClip - snap on trigger locking clip



HAF-507-K12



PRO-415-1

*** = Air Cap
** = Fluid tip size

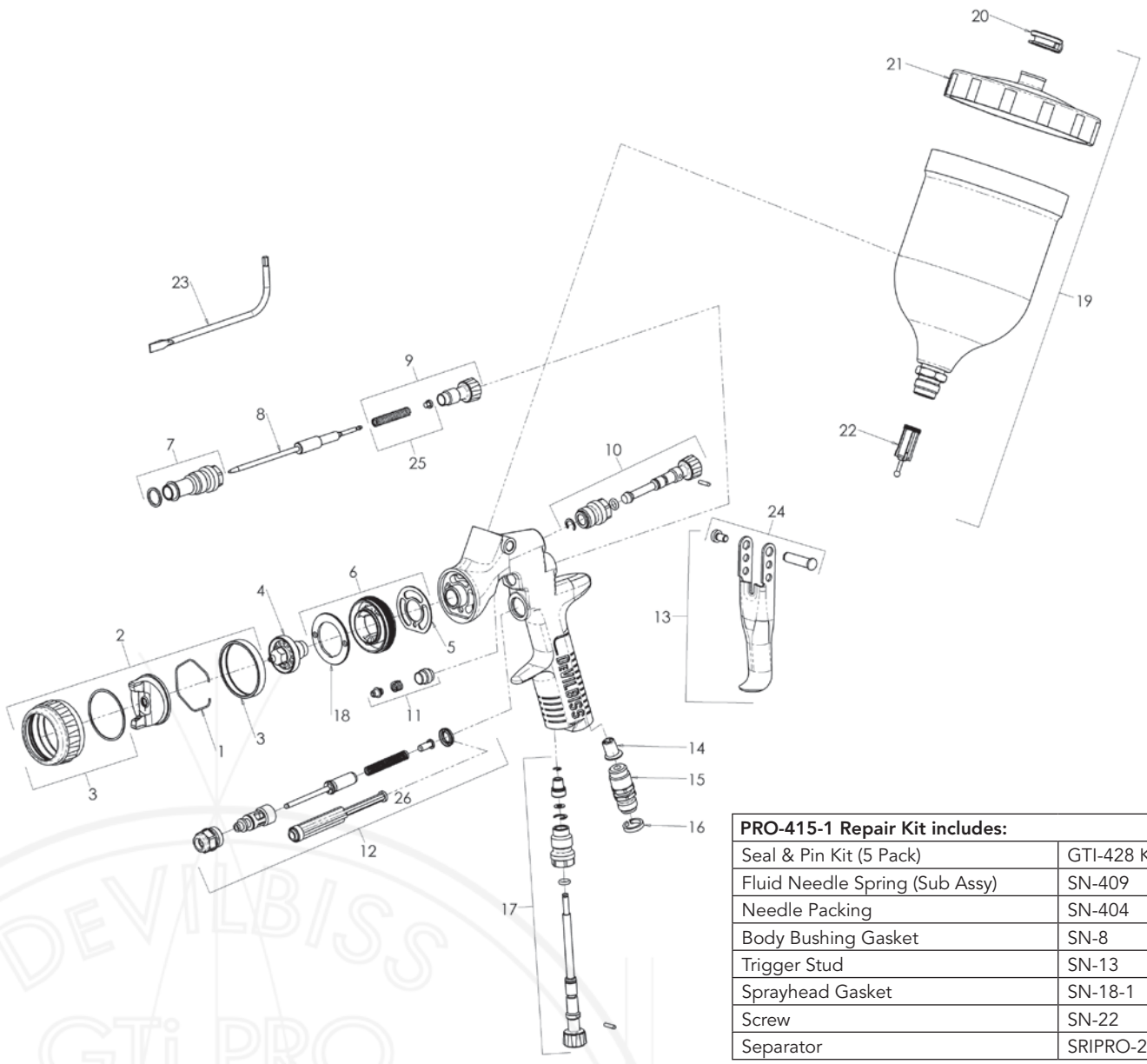

PRO-415-1 Repair Kit includes:	
Seal & Pin Kit (5 Pack)	GTI-428 K5
Fluid Needle Spring (Sub Assy)	SN-409
Needle Packing	SN-404
Body Bushing Gasket	SN-8
Trigger Stud	SN-13
Sprayhead Gasket	SN-18-1
Screw	SN-22
Separator	SRIPRO-2

Ref No	Description	Part Number
1	Air Cap Retaining Clip	JGA-156-K5
2	T1 Trans-tech® Aircap & Ring	PRO-100-T1-K
	T2 Trans-tech® Aircap & Ring	PRO-100-T2-K
	H1 HVLP Aircap & Ring	PRO-100-H1-K
3	Air Cap Retaining Ring & Seals	PRO-405-K
4	Fluid Tip – 12, 13, 14	PRO-200-**-K
5	Spray Head Seal (kit of 2)	SN-18-1-K2
6	Spray Head & Seal Kit	SN-17-1-K
7	Body Bushing & Seal	SN-6-K
8	Fluid Needle	PRO-300-K
9	Fluid Adjusting Knob, Spring & Pad Kit	PRO-3-K
10	Spreader Valve Assembly	PRO-402-K
11	Packing, Spring & Packing Nut Kit	SN-404-K
12	Air Valve Replacement Kit	SN-402-K

Ref No	Description	Part Number
13	Trigger, Stud & Screw Kit	SN-21-K
14	Insert – Pack of 5 (with DGi Pod Only)	SN-57-K5
15	Air Inlet	SN-40-K
16	Colour ID Ring Kit (4 Colours)	SN-26-K4
17	Airflow Valve	PRO-411-K
18	Baffle plate	SN-41-K
19	Gravity Cup Kit	GFC-501
20	Drip Check Lid (kit of 5)	GFC-2-K5
21	Gravity Cup Lid	GFC-402
22	Filter	KGP-5-K5
23	Torx Key	SPN-8-K2
24	Trigger Stud & Torx Screw (kit of 5)	SN-405-K5
25	Needle spring and pad kit	SN-4-K3
26	Air valve seal & service tool	SN-34-K5

HIGH PERFORMANCE, GRAVITY FEED, PRIMER SPRAY GUN



- Advanced technology P1 Trans-Tech Air Cap.
- Suitable for all primers including latest generation waterbase materials.
- Fluid Tip sizes available for fillers, surfacers and polyesters.
- First class atomisation and material distribution.
- Utilises new design air valve for smooth triggering control.
- All new ergonomic gun body with improved "fit and feel".
- Large spray patterns for fast and easy application.
- Drop forged body with tough anodised finish for protection.

Part Number Explanation

PRiPRO - **P1P** - **XX**

Model | Air Cap | Fluid Tip

Specification

Air Inlet Pressure	2.0 bar (29psi)
Air Consumption	300 l/min (10.6 cfm)
Air Inlet Thread	1/4" Universal
Cup Capacity	560 mls
Weight (gun & cup)	760 gms
Air Cap & Ring	Plated Brass
Fluid Tip	Stainless Steel
Fluid Needle	Stainless Steel



No P1
Trans-Tech Air Cap

PRi Spray Gun Kits

Part No	Description
PRiPRO-P1P-14	Gravity Gun & Cup – P1 Air Cap & No. 14 Fluid Tip
PRiPRO-P1P-16	Gravity Gun & Cup – P1 Air Cap & No. 16 Fluid Tip
PRiPRO-P1P-18	Gravity Gun & Cup – P1 Air Cap & No. 18 Fluid Tip
PRiPRO-P1P-20	Gravity Gun & Cup – P1 Air Cap & No. 20 Fluid Tip
PRiPRO-P1P-25	Gravity Gun & Cup – P1 Air Cap & No. 25 Fluid Tip

Kit includes PRiPRO Gravity Gun, cup, paint filter, brush and multi-fit spanner



DGIPRO-502-BAR



KGP-5-K5



GFV-50-F



MPV-60-K

Accessories

Part No	Description
PRIPRO-100-P1-K	Air cap and retaining ring
PRIPRO-210-**-K	Fluid Tip - Size Numbers 14,16,18, 20 & 25
PRIPRO-310--K	Fluid needle
PRO-415-1	Spray gun repair kit – includes seals, packing and springs
DGIPRO-502-BAR	Digital pressure gauge – reads in bars
HAF-507-K12	Lightweight, in-line air filter (pack of 12)
KGP-5-K5	Pack of gravity cup filters for GFC cups
GFC-501	Replacement gravity cup complete (0.6 litre)
4900-5-1-K3	Pack of three cleaning brushes
MPV-60-K3	Male quick detach Uni swivel stem to fit onto gun air inlet
GFV-50-F	Gravity gun bench top stand
GFG-6	Wall mounting bracket for gun and cup
PRO-15-K3	ProClip - snap on trigger locking clip

** = Fluid tip size

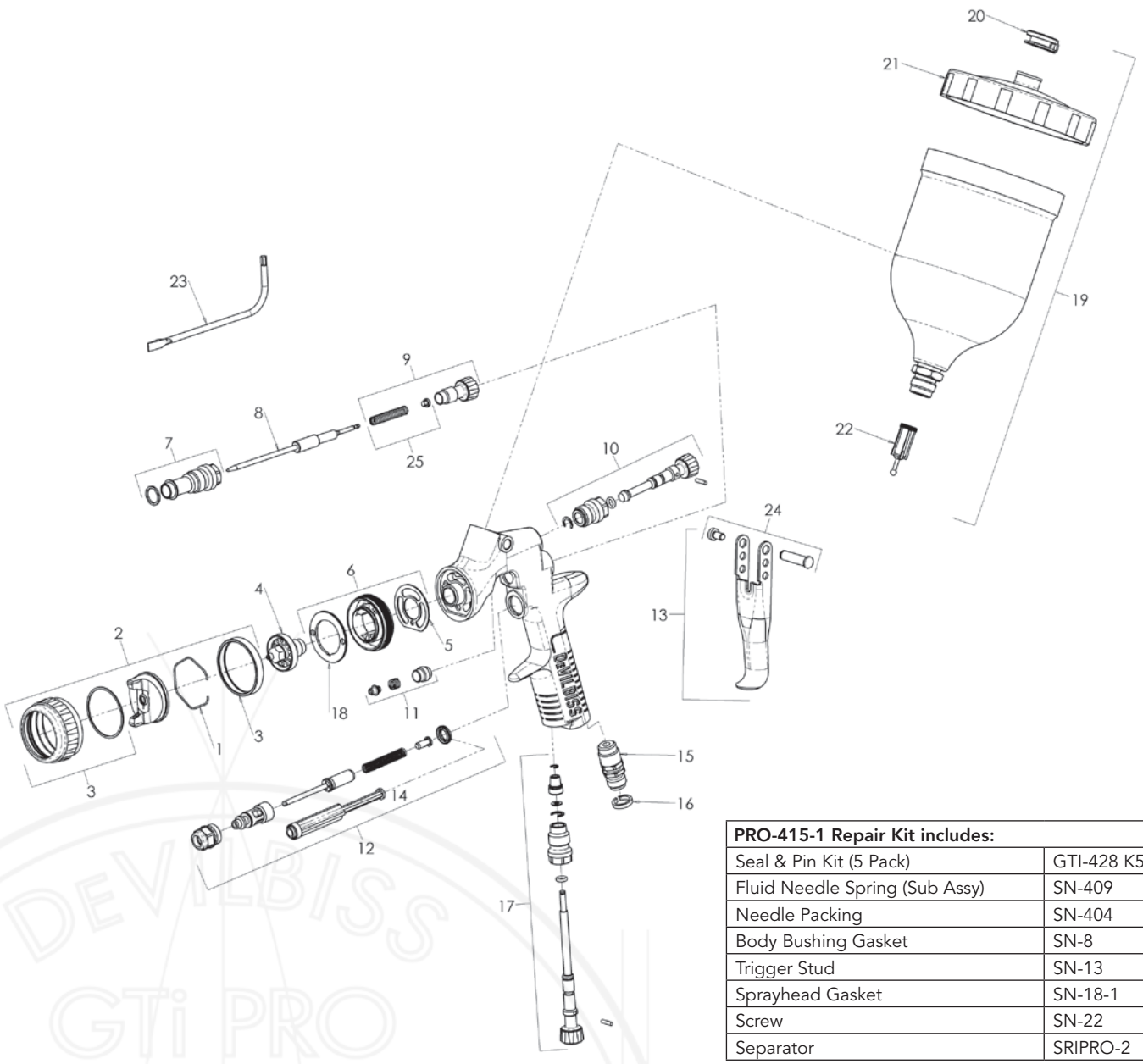

PRO-415-1 Repair Kit includes:	
Seal & Pin Kit (5 Pack)	GTI-428 K5
Fluid Needle Spring (Sub Assy)	SN-409
Needle Packing	SN-404
Body Bushing Gasket	SN-8
Trigger Stud	SN-13
Sprayhead Gasket	SN-18-1
Screw	SN-22
Separator	SRIPRO-2

Ref No	Description	Part Number
1	Air Cap Retaining Clip	JGA-156-K5
2	Trans-tech® Aircap	PRIPRO-100-P1-K
3	Air Cap Retaining Ring & Seals	PRO-405-K
4	Fluid Tip – 14, 16, 18, 20, 25	PRIPRO-210-**-K
5	Spray Head Seal (kit of 2)	SN-18-1-K2
6	Spray Head & Seal Kit	SN-17-1-K
7	Body Bushing & Seal	SN-6-K
8	Fluid Needle	PRIPRO-310-K
9	Fluid Adjusting Knob, Spring & Pad Kit	PRO-3-K
10	Spreader Valve Assembly	PRO-402-K
11	Packing, Spring & Packing Nut Kit	SN-404-K
12	Air Valve Replacement Kit	SN-402-K
13	Trigger, Stud & Screw Kit	SN-21-K

Ref No	Description	Part Number
14	Air valve seal & service tool	SN-34-K5
15	Air Inlet	SN-40-K
16	Colour ID Ring Kit (4 Colours)	SN-26-K4
17	Airflow Valve	PRO-411-K
18	Baffle plate	SN-41-K
19	Gravity Cup Kit	GFC-501
20	Drip Check Lid (kit of 5)	GFC-2-K5
21	Gravity Cup Lid	GFC-402
22	Filter	KGP-5-K5
23	Torx Key	SPN-8-K2
24	Trigger Stud & Torx Screw (kit of 5)	SN-405-K5
25	Needle spring and pad kit	SN-4-K3

SRi Pro LITE & MICRO by DeVILBISS

COMPLIANT SMART / SPOT REPAIR GRAVITY FEED SPRAY GUN

- **Two new models of SRi Gravity Gun for small scale repair work.**
- **SRI Pro Micro has lighter trigger control allowing for greater control for Micro repairs.**
- **New lightweight SRI Pro for improved handling.**
- **Ergonomic gun body with improved fit, feel, comfort and control.**
- **Balanced air valve design for precision control of paint and air.**
- **Different air cap choices to suit all latest refinishing materials.**
- **A range of tip sizes for varying viscosities and control preferences.**
- **Renowned DeVilbiss atomisation quality and even paint distribution.**



Part Number Explanation

SRiPROL	-	**TE5**	-	**08**
SRiPROM	-	**MC1**	-	**06M**
Model		Air Cap		Fluid Tip

Specification

Air Consumption:	HV5: 135 l/min (4.8 cfm) @ 2.0 bar (30 psi)
	TE5: 100 l/min (3.5 cfm) @ 2.0 bar (30 psi)
	RS1: 55 l/min (1.9 cfm) @ 1.0 bar (15psi)
	MC1: 50 l/min (1.8 cfm) @ 1.0 bar (15psi) SRi Pro MICRO only
Air inlet thread	1/4" Universal
Cup Capacity	125 mls
Weight (gun & cup)	455 gms
Air cap & ring	Plated Brass
Fluid Tip	Stainless Steel
Needle	Stainless Steel



No TE5 High Efficiency Air Cap



No HV5 HVLP Air Cap



No MC1 High Efficiency Air Cap

SRi Pro Gravity Spot Repair Spray Gun Kits (Specify the air cap & tip size required)

Part No	Description
SRIPROL-TE5-08	Gravity Feed Gun with TE5 High Efficiency air cap & No. 08 fluid tip
SRIPROL-HV5-10	Gravity Feed Gun with HV5 HVLP air cap & size No. 10 fluid tip
SRIPROM-MC1-06	Gravity Feed Gun with MICRO air cap & size No. 06 fluid tip

The kit contains: a spray gun with chosen cap tip set up, gravity cup, pouring funnel, spanner, torx key and cleaning brush.



SRIPRO-102-RS1-K

Accessories

Part No	Description
SRIPRO-102-HV5-K	HVLP Air Cap and retaining ring
SRIPRO-102-TE5-K	High-Efficiency Air Cap and retaining ring
SRIPRO-102-MC1-BL-K	High-Efficiency Micro Air Cap and retaining ring
SRIPRO-102-RS1-K	Round spray (hornless) cap - priming, pinstriping
SRIPRO-200-**-K	Fluid Tip - Sizes No. 08, No. 10, No. 12 & No. 14
SRIPRO-210-06M-K	Fluid Tip - Micro only
SRIPRO-300-08-10-K	Fluid Needle for No. 08 & No. 10 fluid tip
SRIPRO-300-12-14-K	Fluid Needle for No. 12 & No. 14 fluid tip
SRIPRO-310-06M-K	Fluid Needle - Micro only
SPN-8-K2	Torx & flat blade Screwdriver - Trigger & Needle Packing
MPV-60-K3	Male Quick Detach Uni Swivel - fits to gun air inlet
SRi-65-K2	Pack of two cleaning brushes
PRO-415-1	SRi service kit – includes seals, packing and springs
SRi-510	125ml Acetal gravity cup
SRi-51-K12	Pack of 12 SRi cup pouring funnels
SRi-478-K12	Pack of 12 SRi Gravity Cups & 12 coloured lids
SRi-42-K3	Pack of 3 cone filters
DGIPRO-502-BAR	Digital Gauge - Reads in bars



SPN-8-K2 & SRi-50-K2



MPV-60-K3



DGiPRO-502-BAR

NEW FOR 2015

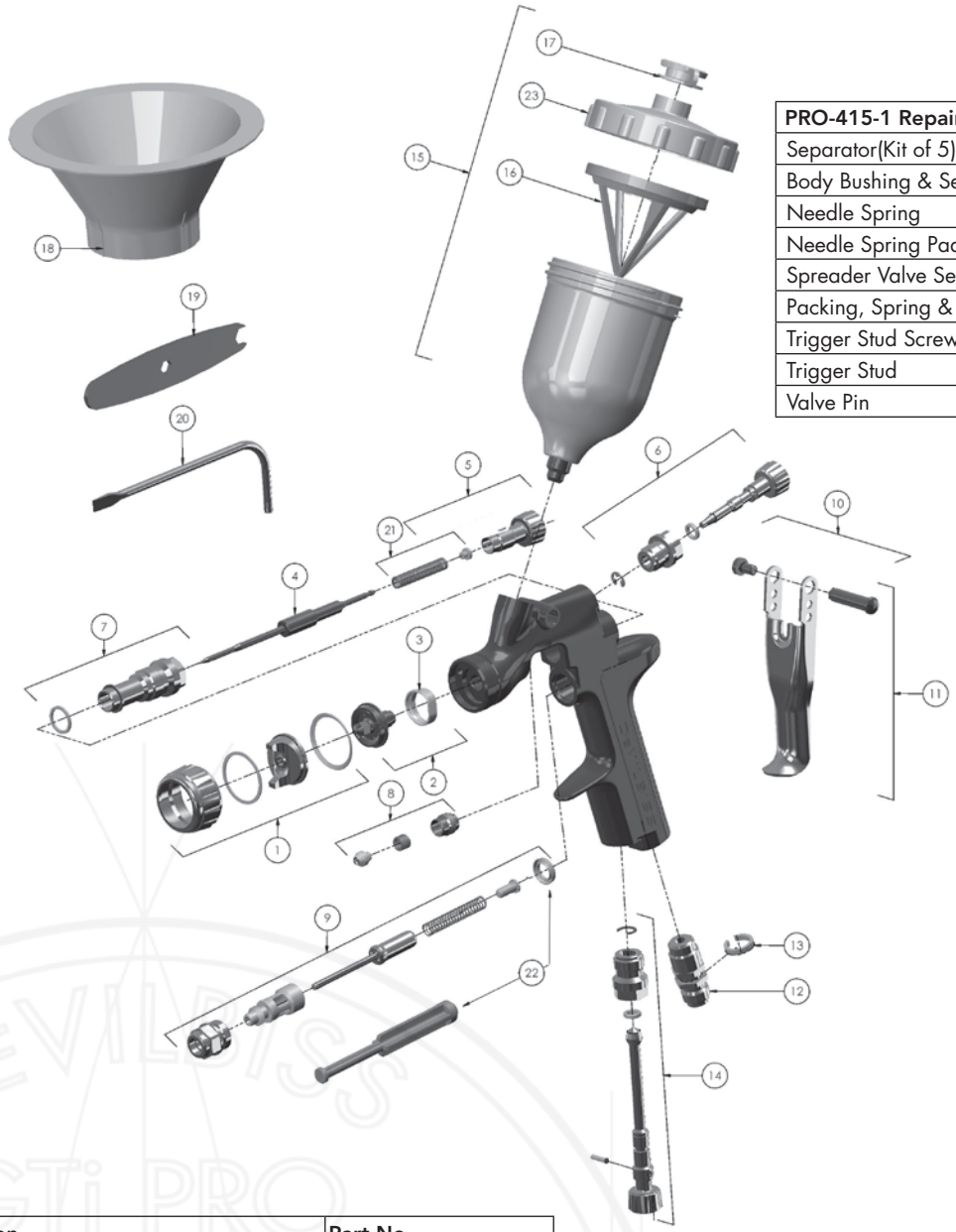

PRO-415-1 Repair Kit includes:	
Separator(Kit of 5)	SRIPRO-2K
Body Bushing & Seal	-
Needle Spring	-
Needle Spring Pad	-
Spreader Valve Seal	-
Packing, Spring & Packing Nut Kit	SN-404-K
Trigger Stud Screw (T20 Torx)	-
Trigger Stud	-
Valve Pin	-

Ref. No	Description	Part No.
1	HVLP Air Cap & Ring	SRIPRO-102-HV5-K
	High Efficiency Air Cap & Ring	SRIPRO-102-TE5-K
	Round Spray Air Cap & Ring	SRIPRO-102-RS1-K
	High Efficiency Micro Air Cap & Ring	SRIPRO-102-MC1-BL-K
2	Fluid Tip (** = 08, 10, 12 or 14)	SRIPRO-200-**-K
	Fluid Tip (Micro only)	SRIPRO-210-06M-K
3	Separator	SRIPRO-2-K5
4	Fluid Needle for No. 08 & No. 10 Fluid Tips	SRIPRO-300-08-10-K
	Fluid Needle for No. 12 & No. 14 Fluid Tips	SRIPRO-300-12-14-K
	Fluid Needle for SRiPRO Micro	SRIPRO-310-06M-K
5	Fluid Adjusting Knob	SN-81-K
	Fluid Adjusting Knob (Micro only)	SN-81-BL-K
6	Spreader Valve Assembly	SRIPRO-402-K
	Spreader Valve Assembly (Micro only)	SRIPRO-402-BL-K
7	Body Bushing & Seal	SN-6-K
8	Packing, Spring & Packing Nut Kit	SN-404-K
9	Air Valve Assembly	SN-402-K

Ref. No	Description	Part No.
10	Stud and Screw kit	SN-405-K5
11	Trigger, Stud & Screw Kit	SN-42-K
12	Air Inlet	SN-40-K
13	Colour ID Ring Kit (4 Colours)	SN-26-K4
14	Airflow Valve	PRO-408-K
	Airflow Valve (Micro)	PRO-408-BL-K
15	Gravity Cup Kit	SRI-510
16	Filter	SRI-42-K3
17	Drip Check Lid (kit of 5)	GFC-2-K5
18	Funnel kit of 12	SRI-51-K12
19	Spanner kit of 2	SRI-50-K2
20	Torx Key	SPN-8-K2
21	Needle spring and pad kit	SN-423-K3
22	Air valve seal & service tool	SN-34-K5
23	Gravity Cup Lid	SRI-414-K2

COMPLIANT SMART / SPOT REPAIR GRAVITY FEED SPRAY GUN

- **Totally redesigned SRi gravity gun for small scale repair work.**
- **Ergonomic gun body with improved fit, feel, comfort and control.**
- **Balanced air valve design for precision control of paint and air.**
- **Three compliant air cap choices to suit all latest refinishing materials.**
- **A range of four tip sizes for varying viscosities and control preferences.**
- **Renowned DeVilbiss atomisation quality and even paint distribution.**
- **Faster, easier maintenance from user-friendly fittings and adjustments.**
- **Rugged drop forged body with anodised finish for protection.**



Part Number Explanation

SRiPRO - **TS1** - **08**

Model | Air Cap | Fluid Tip

Specification

Air Consumption:	HS1: 135 l/min (4.8 cfm) @ 2.0 bar (30 psi)
	TS1: 100 l/min (3.5 cfm) @ 2.0 bar (30 psi)
	RS1: 55 l/min (1.9 cfm) @ 1.0 bar (15psi)
Air inlet thread	1/4" Universal
Cup Capacity	125 mls
Weight (gun & cup)	500 gms
Air cap & ring	Plated Brass
Fluid Tip	Stainless Steel
Needle	Stainless Steel

No HS1
Air Cap HVLP



No TS1
Air Cap Trans Tech

SRi Pro Gravity Spot Repair Spray Gun Kits (Specify the air cap & tip size required)

Part No	Description
SRIPRO-TS1-08	Gravity Feed Gun with TS1 Trans-Tech cap & No. 08 fluid tip
SRIPRO-HS1-10	Gravity Feed Gun with HS1 HVLP cap & size No. 10 fluid tip

The kit contains: a spray gun with chosen cap tip set up, gravity cup, pouring funnel, spanner, torx key and cleaning brush.



SRIPRO-100-RS1-K

Accessories

Part No	Description
SRIPRO-100-HS1-K	HVLP Air Cap and retaining ring
SRIPRO-100-TS1-K	Trans-Tech Air Cap and retaining ring
SRIPRO-100-RS1-K	Round spray (hornless) cap - priming, pinstriping
SRIPRO-200-**-K	Fluid Tip - Sizes No. 08, No. 10, No. 12 & No. 14
SRIPRO-300-08-10-K	Fluid Needle for No. 08 & No. 10 fluid tip
SRIPRO-300-12-14-K	Fluid Needle for No. 12 & No. 14 fluid tip
SPN-8-K2	Torx & flat blade Screwdriver - Trigger & Needle Packing
MPV-60-K3	Male Quick Detach Uni Swivel - fits to gun air inlet
SRi-65-K2	Pack of two cleaning brushes
PRO-415-1	SRi service kit – includes seals, packing and springs
SRi-510	125ml Acetal gravity cup
SRi-51-K12	Pack of 12 SRi cup pouring funnels
SRi-478-K12	Pack of 12 SRi Gravity Cups & 12 coloured lids
SRi-42-K3	Pack of 3 cone filters
DGIPRO-502-BAR	Digital Gauge - Reads in bars



SPN-8-K2 &
SRi-50-K2



MPV-60-K3



DGiPRO-502-BAR

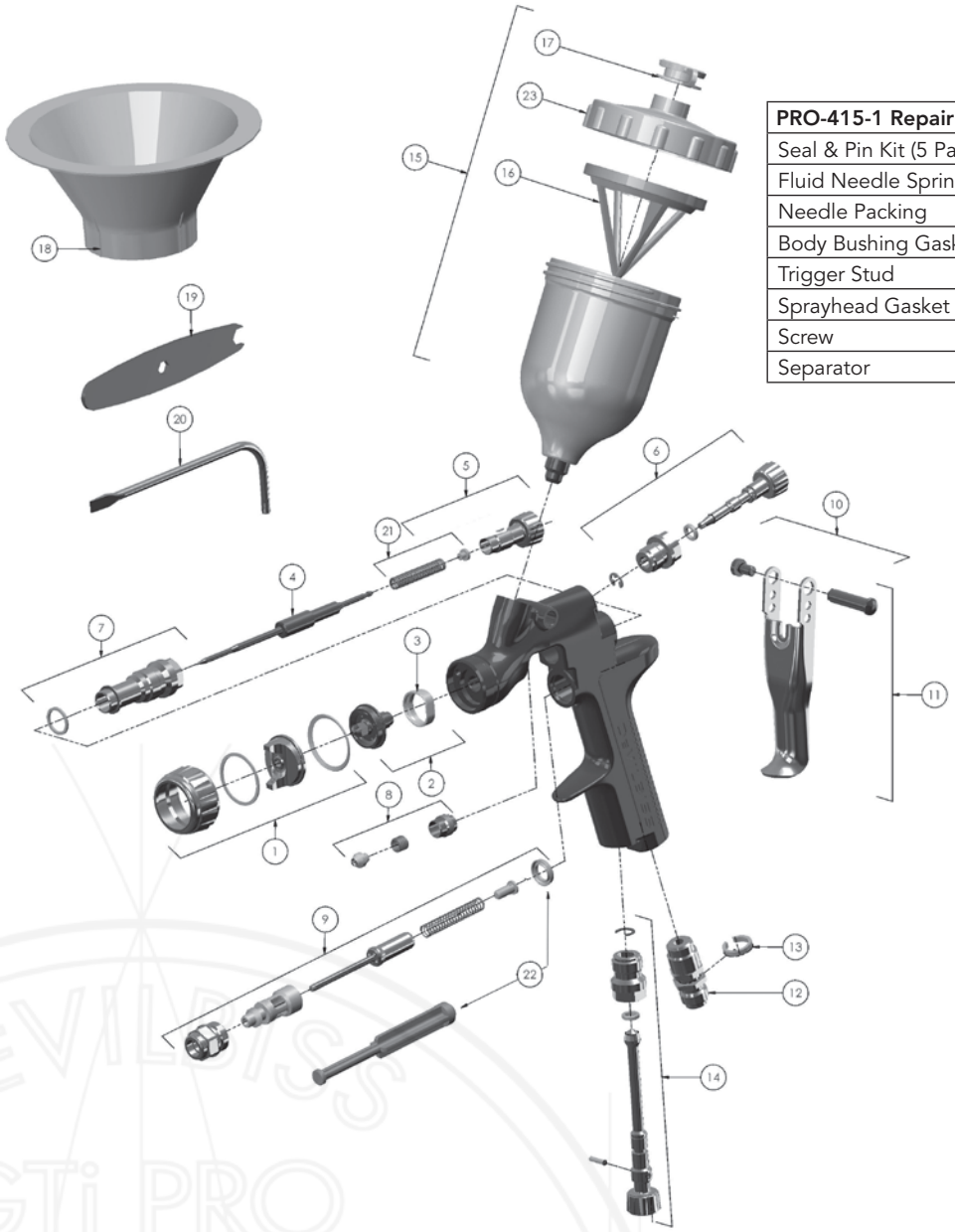

PRO-415-1 Repair Kit includes:	
Seal & Pin Kit (5 Pack)	GTI-428 K5
Fluid Needle Spring (Sub Assy)	SN-409
Needle Packing	SN-404
Body Bushing Gasket	SN-8
Trigger Stud	SN-13
Sprayhead Gasket	SN-18-1
Screw	SN-22
Separator	SRIPRO-2

Ref. No	Description	Part No.
1	HVLP Air Cap & Ring	SRIPRO-100-HS1-K
	Trans-Tech Air Cap & Ring	SRIPRO-100-TS1-K
	Round Spray Air Cap & Ring	SRIPRO-100-RS1-K
2	Fluid Tip (** = 08, 10, 12 or 14)	SRIPRO-200-**-K
3	Separator	SRIPRO-2-K5
4	Fluid Needle for No. 08 & No. 10 Fluid Tips	SRIPRO-300-08-10-K
	Fluid Needle for No. 12 & No. 14 Fluid Tips	SRIPRO-300-12-14-K
5	Fluid Adjusting Knob, Spring & Pad Kit	PRO-3-K
6	Spreader Valve Assembly	SRIPRO-401-K
7	Body Bushing & Seal	SN-6-K
8	Packing, Spring & Packing Nut Kit	SN-404-K
9	Air Valve Assembly	SN-402-K

Ref. No	Description	Part No.
10	Stud and Screw kit	SN-405-K5
11	Trigger, Stud & Screw Kit	SN-42-K
12	Air Inlet	SN-40-K
13	Colour ID Ring Kit (4 Colours)	SN-26-K4
14	Airflow Valve	PRO-404-K
15	Gravity Cup Kit	SRI-510
16	Filter	SRI-42-K3
17	Drip Check Lid (kit of 5)	GFC-2-K5
18	Funnel kit of 12	SRI-51-K12
19	Spanner kit of 2	SRI-50-K2
20	Torx Key	SPN-8-K2
21	Needle spring and pad kit	SN-4-K3
22	Air valve seal & service tool	SN-34-K5
23	Gravity Cup Lid	SRI-414-K2

GENERAL PURPOSE SPRAY GUN



- **Cost-effective i-system spray gun, for General Purpose applications around the bodyshop.**
- **Featuring the latest GTi Pro forged aluminium gun body with lightweight aluminium controls, for that legendary fit and feel synonymous with DeVilbiss ergonomics.**
- **Fitted with the new GP1 High Efficiency air cap for perfect atomisation.**
- **Ideal for a wide range of materials including enamels, synthetics, primers, 2 pack commercial paints as well as materials that demand high or fast application rates.**
- **Available with a choice of 1.6mm or 1.8mm fluid tips, providing the flexibility required for General Purpose duty.**

Part Number Explanation

GPi - GP1 - 18

Model - Air Cap - Fluid Tip

No GP1
High Efficiency Air Cap

Specification

Air Inlet Pressure	2.0 bar (29psi)
Air Consumption	270 l/min (9.5cfm)
Air Inlet Thread	1/4" Universal
Fluid Flow	1.4 - 100-180
	1.6 - 180-280
	1.8 - 200-350
Pattern	280-320 mm
Cup Capacity	560 mls
Weight (gun & cup)	683 gms
Air Cap & Ring	Plated Brass
Fluid Tip	Stainless Steel
Fluid Needle	Stainless Steel

GPi Spray Gun Kits

Part No	Description
GPI-GP1-14	Gravity gun & cup kit – GPI air cap & 1.4mm fluid tip
GPI-GP1-16	Gravity gun & cup kit – GPI air cap & 1.6mm fluid tip
GPI-GP1-18	Gravity gun & cup kit – GPI air cap & 1.8mm fluid tip

Accessories

Part No	Description
PRO-102-GP1-K	Air Cap
PROC-215-**-K	Fluid Tip
PRO-306-16-18-K	Needle
PRO-415-1	Spray Gun Service/Repair Kit
SN-406	Gun wrench, Torx & flat back screwdriver, cleaning brush and colour ID rings
HAV-501-B	In-Line Air Adjusting Valve
MPV-60-K3	Male Quick Detach Uni Swivel - fits to gun air inlet
HAF-507-K12	Lightweight in-line air filter (pack of 12)
4900-5-1-K3	Pack of three cleaning brushes
KGP-5-K5	Pack of 5 gravity cup filters for GFC cups
PRO-15-K3	ProClip - snap on trigger locking clip
GFV-50-F	Gravity Gun Stands

** = Fluid tip size



HAV-501-B



KGP-5-K5



GFV-50-F



MPV-60-K3

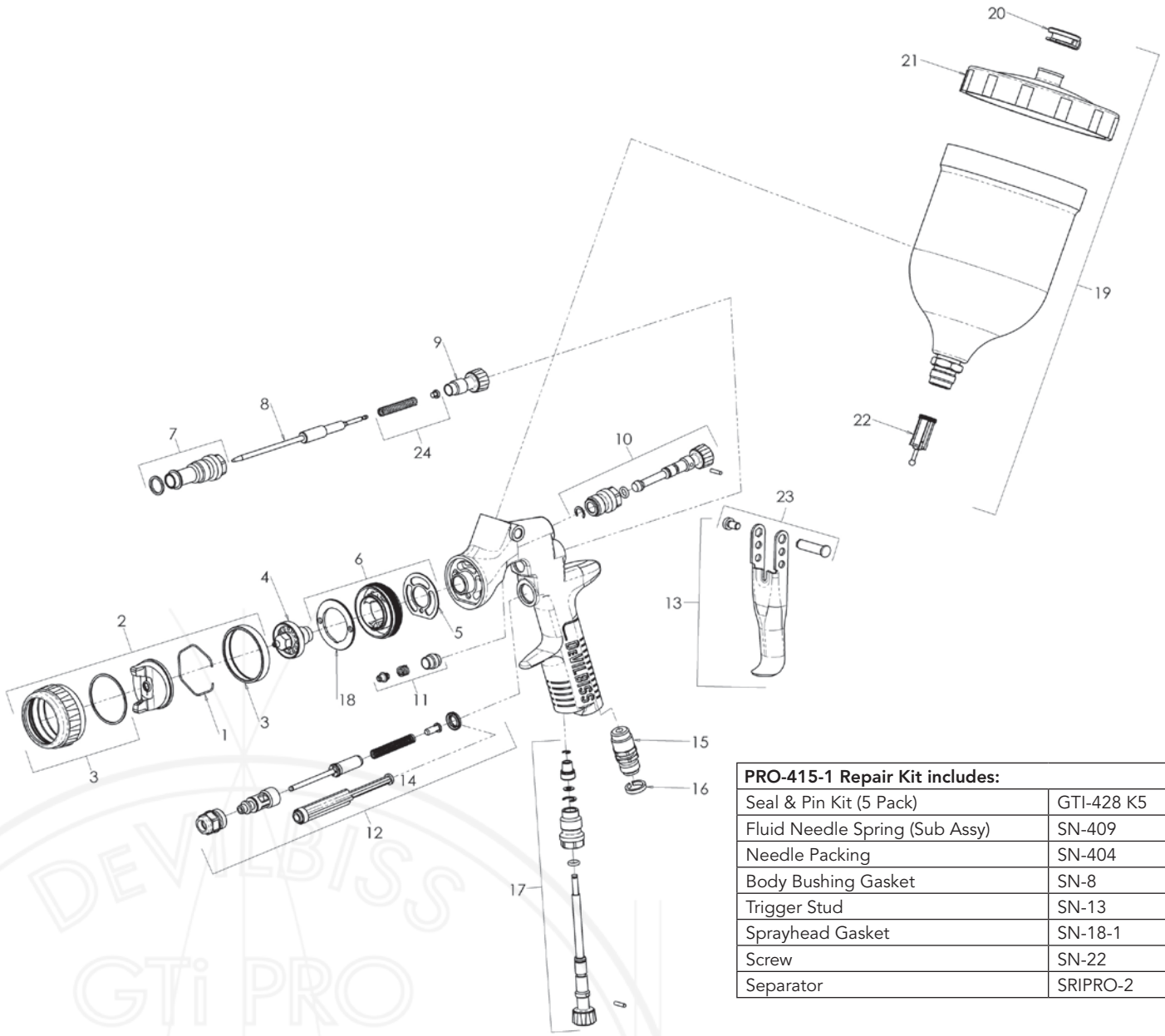

PRO-415-1 Repair Kit includes:	
Seal & Pin Kit (5 Pack)	GTI-428 K5
Fluid Needle Spring (Sub Assy)	SN-409
Needle Packing	SN-404
Body Bushing Gasket	SN-8
Trigger Stud	SN-13
Sprayhead Gasket	SN-18-1
Screw	SN-22
Separator	SRIPRO-2

Ref No	Description	Part Number
1	Air Cap Retaining Clip	JGA-156-K5
2	Air Cap	PRO-102-GP1-K
3	Air Cap Retaining Ring & Seals	PRO-405-K
4	Fluid Tip – 14, 16, 18	PROC-215-**-K
5	Spray Head Seal (kit of 2)	SN-18-1-K2
6	Spray Head & Seal Kit	SN-17-1-K
7	Body Bushing & Seal	SN-6-K
8	Fluid Needle for No. 12 & No. 14 Fluid Tips	PRO-306-12-14-K
	Fluid Needle for No. 16 & No. 18 Fluid Tips	PRO-306-16-18-K
9	Fluid Adjusting Knob	PRO-3
10	Spreader Valve Assembly	PRO-406-K
11	Packing, Spring & Packing Nut Kit	SN-404-K
12	Air Valve Replacement Kit	SN-402-K

Ref No	Description	Part Number
13	Trigger, Stud & Screw Kit	SN-21-K
14	Air Valve Seal & Service Tool	SN-34-K5
15	Air Inlet	SN-40-K
16	Colour ID Ring Kit (4 Colours)	SN-26-K4
17	Airflow Valve	PRO-407-K
18	Baffle plate	SN-41-K
19	Gravity Cup Kit	GFC-501
20	Drip Check Lid (kit of 5)	GFC-2-K5
21	Gravity Cup Lid	GFC-402
22	Filter	KGP-5-K5
23	Trigger Stud & Torx Screw (kit of 5)	SN-405-K5
24	Needle spring and pad kit	SN-4-K3
25	Air valve seal & service tool	SN-34-K5

PROFESSIONAL CONVENTIONAL GRAVITY FEED SPRAY GUN

- Totally redesigned GFG gun for professional use.
- Renowned DeVilbiss atomisation quality and even paint distribution.
- Air valve design for ultra smooth triggering and control.
- Rugged drop forged body with anodised finish for protection.
- A choice of two advanced technology air caps to suit solids and metallics.
- Three fluid tip sizes for varying viscosities and control preferences.
- Ergonomic gun body with improved fit, feel, comfort and control.
- Faster, easier maintenance from user-friendly fittings and adjustments.



Part Number Explanation

GFGPRO - C1 - XX

Model | Air Cap | Fluid Tip



No C1 Air Cap



No C2 Air Cap

Specification

Air Inlet Pressure	C1: 2.5 - 3.0 bar (30 - 45 psi) C2: 2.5 - 4.0 bar (30 - 60 psi)
Air Consumption	C1: 300 l/min (10.6 cfm) @ 3.0 bar C2: 305 l/min (12.8 cfm) @ 3.0 bar
Air Inlet Thread	1/4" Universal

Cup Capacity	560 mls
Weight (gun & cup)	768 gms
Air Cap & Ring	Plated Brass
Fluid Tip	Stainless Steel
Fluid Needle	Stainless Steel



DGIPRO-502-BAR

GFG-Pro Spray Gun Kits

When ordering please specify the air cap of your choice (C1 or C2) and the tip size of your choice (14, 16 or 18).

Part No Examples	Description
GFGPRO-C1-14	Gravity Gun & Cup - C1 air cap and No. 14 fluid tip
GFGPRO-C1-16	Gravity Gun & Cup - C1 air cap and No. 16 fluid tip
GFGPRO-C2-18	Gravity Gun & Cup - C2 air cap and No. 18 fluid tip

Kit includes GFG PRO Gravity gun, cup, paint filter, brush and multi-fit spanner



MPV-60-K3

Accessories

Part No	Description
PROC-120-C1-K	C1 Air Cap and retaining ring
PROC-120-C2-K	C2 Air Cap and retaining ring
PROC-220-**-K	Fluid Tip - Size Numbers 14, 16 & 18
GFGPRO-320-K	Fluid Needle
PRO-415-1	Spray Gun Service/Repair Kit
SPN-8-K2	Torx & flat blade Screwdriver - Trigger & Needle Packing
SN-406	Gun wrench, Torx & flat back screwdriver, cleaning brush and colour ID rings
DGIPRO-502-BAR	Digital Gauge - Reads in bars
MPV-60-K3	Male Quick Detach Uni Swivel - fits to gun air inlet
HAF-507-K12	Lightweight in-line air filter (pack of 12)
4900-5-1-K3	Pack of three cleaning brushes
KGP-5-K5	Pack of 5 gravity cup filters for GFC cups
PRO-15-K3	ProClip - snap on trigger locking clip



HAF-507-K12



PRO-415-1

** = Fluid tip size

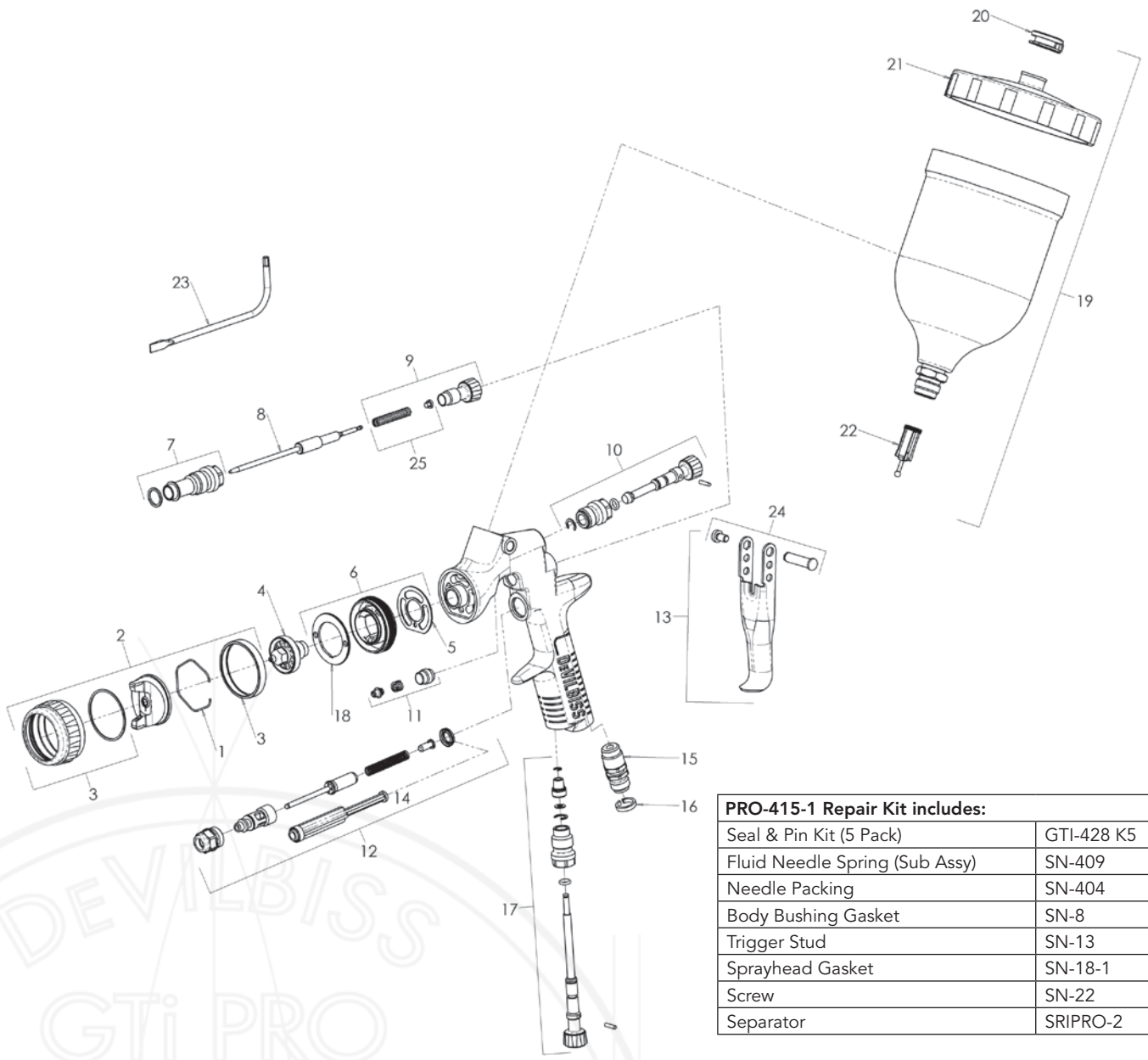

PRO-415-1 Repair Kit includes:	
Seal & Pin Kit (5 Pack)	GTI-428 K5
Fluid Needle Spring (Sub Assy)	SN-409
Needle Packing	SN-404
Body Bushing Gasket	SN-8
Trigger Stud	SN-13
Sprayhead Gasket	SN-18-1
Screw	SN-22
Separator	SRIPRO-2

Ref No	Description	Part Number
1	Air Cap Retaining Clip	JGA-156-K5
2	C1 Aircap & Ring	PROC-120-C1-K
	C2 Aircap & Ring	PROC-120-C2-K
3	Air Cap Retaining Ring & Seals	PRO-405-K
4	Fluid Tip	PROC-220-**-K
5	Spray Head Seal (kit of 2)	SN-18-1-K2
6	Spray Head & Seal Kit	SN-17-1-K
7	Body Bushing & Seal	SN-6-K
8	Fluid Needle	GFGPRO-320-K
9	Fluid Adjusting Knob, Spring & Pad Kit	PRO-3-K
10	Spreader Valve Assembly	PRO-402-K
11	Packing, Spring & Packing Nut Kit	SN-404-K
12	Air Valve Replacement Kit	SN-402-K

Ref No	Description	Part Number
13	Trigger, Stud & Screw Kit	SN-21-K
14	Air valve seal & service tool	SN-34-K5
15	Air Inlet	SN-40-K
16	Colour ID Ring Kit (4 Colours)	SN-26-K4
17	Airflow Valve	PRO-411-K
18	Baffle plate	SN-41-K
19	Gravity Cup Kit	GFC-501
20	Drip Check Lid (kit of 5)	GFC-2-K5
21	Gravity Cup Lid	GFC-402
22	Filter	KGP-5-K5
23	Torx Key	SPN-8-K2
24	Trigger Stud & Torx Screw (kit of 5)	SN-405-K5
25	Needle spring and pad kit	SN-4-K3

FLG-5

by DeVILBISS

FLG-5 GENERAL PURPOSE SPRAY GUN



- General purpose compliant spray gun for a wide range of refinish paints and coatings.
- Operates with unique and efficient DeVilbiss Trans-Tech® Atomisation Technology.
- Ergonomically shaped gun handle for positive grip and comfort.
- Smooth action trigger with exceptionally light pull for fatigue free operation.
- Ultra lightweight but strong, cast aluminium gun body.
- Full controls of pattern shape, fluid flow rate and air inlet pressure.
- Precision engineered brass air cap and stainless steel fluid tips.
- Choice of gravity or suction models with large capacity cups.
- NOT SUITABLE FOR USE WITH WATERBORNE MATERIALS.

Part Number Explanation

FLG	-	G5	-	14
Model		Gravity/Air Cap		Fluid Tip

Specification

Air inlet Pressure	2.0 bar (29 psi) – Suction & Gravity
Air Consumption	277 l/min (9.8 cfm)
Air Inlet Thread	1/4" Universal
Cup Capacity	Gravity 560 mls, Suction 1140 mls
Weight (gun & cup)	Gravity 642 gms, Suction 934 gms
Air Cap	Plated brass
Retaining Ring	Plated brass
Fluid Tip	Stainless Steel
Fluid Needle	Stainless Steel



FLG-5 Air Cap

FLG-5 Spray Gun Kit

Part No	Description
FLG-G5-14	Gravity Gun & Cup Kit – No 5 Air Cap & 1.4 mm Fluid Tip
FLG-G5-18	Gravity Gun & Cup Kit – No 5 Air Cap & 1.8 mm Fluid Tip
FLG-S5-18	Suction Gun & Cup Kit – No 5 Air Cap & 1.8 mm Fluid Tip



4900-5-1-K3

Spares and Accessories

Part No	Description
FLG-0001-5	No 5 Trans-Tech Air Cap (Fits Gravity & Suction)
SGK-0023	Air Cap Retaining Ring
SGK-0012-14	1.4 mm fluid tip for gravity gun
SGK-0012-20	2.0 mm fluid tip for gravity gun
SGK-0014-18	1.8 mm fluid tip for suction and gravity guns
SGK-0430-18	Fluid Needle (for 1.8 mm tip – Suction Gun)
SGK-0420	Fluid Needle (for 2.0 mm tip – Gravity Gun)
SGK-0418	Fluid Needle (for 1.8 mm tip – Gravity Gun)
SGK-0414	Fluid Needle (for 1.4mm - Gravity Gun)
SGK-0043-K10	Fluid Tip seal (pack of 10)
K-5030	Baffle Replacement Kit
K-5040	Repair kit – seals and springs – includes service tool
KGP-5-K5	Pack of gravity cup filters for GFC cup
MPV-60-K3	Male, quick detach, universal swivel – fits to gun air inlet
4900-5-1-K3	Pack of three cleaning brushes
KK-4584	Spray gun cleaning tool kit – purpose made brushes & tools
SGK-0537	Needle Packing



HAV-501-B



KK-4584



KGP-5-K5

Ref No	Description - Gravity Gun	Part Number
1	Retaining ring	SGK-0023
2	Air cap	FLG-0001-5
3	Fluid tip 1.4mm, Fluid tip 1.8mm	SGK-0012-14 SGK-0014-18
	Fluid tip 2.0mm (available separately)	SGK-0012-20
4	Gasket	SGK-0043-K10* •
5	Baffle	* •
6	Packing	*
7	U-cup seal	*
8	Air-valve seat	*
9	Air-valve stem	*
10	Air-valve spring	*
11	Fluid needle 1.4mm	SGK-0414
	Fluid needle 1.8mm	SGK-0418
	Fluid needle 2.0mm (available separately)	SGK-0420
12	Filter	KGP-5-K5
13	Lid assembly	GFC-402
14	Drip free vent lid kit of 5	GFC-2-K5
15	Cup assembly	GFC-501
16	Assembly tool	*

*	Seal, baffle and gasket replacement kit, items 4, 5, 6, 7, 8, 9, 10, and 16	K-5040
•	Baffle replacement kit, items 4 and 5.	K-5030

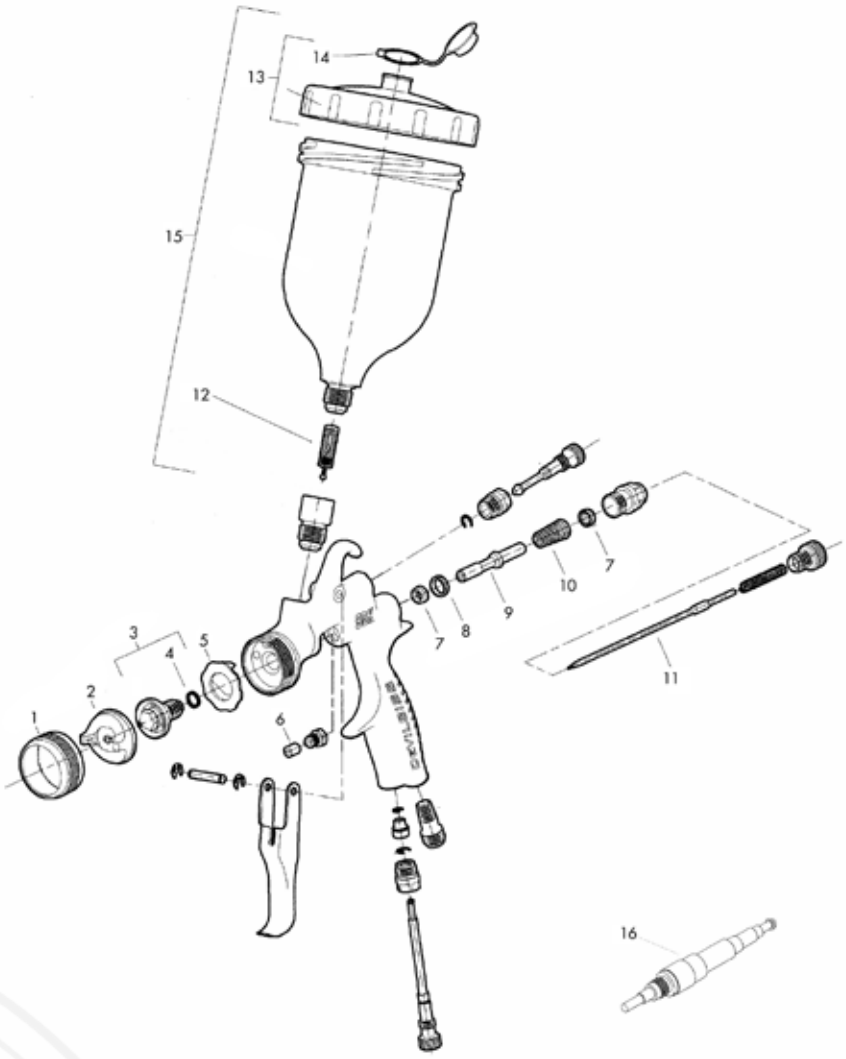

Ref No	Description - Suction Gun	Part Number
1	Retaining ring	SGK-0023
2	Air cap	FLG-0001-5
3	Fluid tip 1.8mm	SGK-0014-18
4	Gasket	SGK-0043-K10* •
5	Baffle	* •
6	Packing	SGK-0337*
7	U-cup seal	*
8	Air-valve seat	*
9	Air-valve stem	*
10	Air-valve spring	*
11	Fluid needle 1.8mm	SGK-0430-18
12	Assembly tool	*

*	Seal, baffle and gasket replacement kit, items 4, 5, 6, 7, 8, 9, and 10	K-5040
•	Baffle replacement kit, items 4 and 5	K-5030

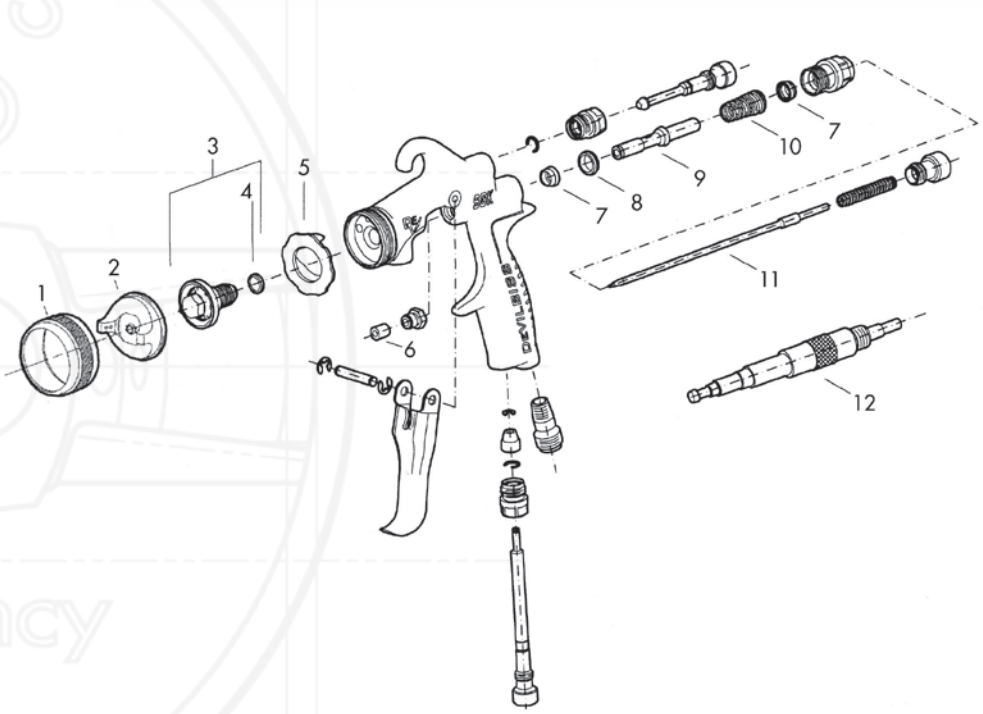

GRAVITY FEED AIRBRUSH PERFORMANCE & VERSATILITY FOR AUTOMOTIVE ARTISTS

- Sprays most automotive paints and lacquers.
- Hairline detail to high paint-flow shading and gradual fades.
- Lightweight, well balanced with smooth double action trigger.
- Crown cap standard for fine lines and needle protection.
- Copper, nickel and chrome plated body.
- Pre-set handle for precise control of paint flow.
- Removable 9 mls (1/3rd oz) gravity cup.
- Solvent proof fluid passages, PTFE needle packing.
- Precision made and hand tested in the U.S.A.



Part Number

DGR - 501G - 35



Specification

Operating Pressure	1.3 – 3.5 bar (20 -50 psi)
Max inlet pressure	12 bar (175 psi)
Fluid tip	0.35mm
Cup Capacity	9 mls (1/3 fl/oz)
Airbrush plating	Nickel, copper, chrome
Needle Packing	PTFE (solvent proof)
Hose: Inside diameter	3.2 mm (1/8")
Air Hose connection	1/4" NPS (M)
Universal fluid threaded connector	3/8"

DAGR Airbrush Kit and Accessories

Part No	Description
DGR-501G-35	DAGR Gravity Airbrush - 0.65mm – 9 CC Cup/lid (1/3 fl/oz)
DGR-123	3m (10') Braided Nylon Air Hose with loose nut 1/4" swivel connections.
DGR-121K	Repair Kit - 'O' Rings, needle spring and washers
DGR-124	3m (10') Braided Air Hose with QD
DGR-127	Quick Disconnect Kit

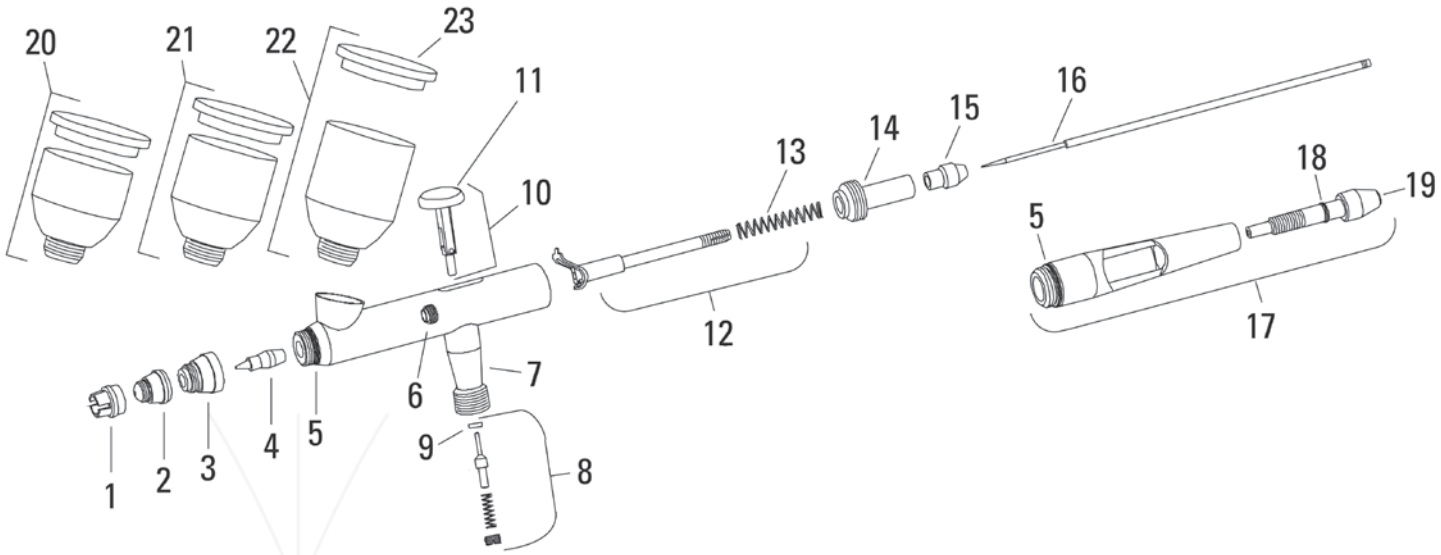

Ref. No.	Description	Part No.
1	Crown cap	DGR-101
2	Air cap (for .35mm Tip)	DGR-103-35
3	Head cap	DGR-104
4	Tip (.35mm)	DGR-105-35
* 5	O-ring (head cap & handle)	-
6	Packing and nut assembly (PTFE)	DGR-106K
7	Air valve casing	DGR-107
8	Air valve kit	DGR-108K
* 9	Air valve washer	-
10	Trigger assembly	DGR-109
11	Trigger buttons ergo-pack (4 types)	DGR-122K
12	Needle guide, rocker, & spring	DGR-110K
* 13	Needle spring	-

Ref. No.	Description	Part No.
14	Spring guide	DGR-111
15	Needle locknut	DGR-112
16	Needle (for .35mm tip)	DGR-113-35
17	Cutaway handle w/pre-set	DGR-114
* 18	O-ring (pre-set needle knob)	-
19	Pre-set needle knob	DGR-116
20	1/4 oz. (7 cc) cup and lid	DGR-117
21	1/3 oz. (9 cc) cup and lid (standard)	DGR-118
22	1/2 oz. (14 cc) cup and lid	DGR-119
23	Cup lid	DGR-120
Repair Kit		
	DAGR repair kit - includes item numbers 5, 9, 13 & 18	DGR-121K

COMPLIANT SUCTION & PRESSURE FEED SPRAY GUNS



- Totally redesigned GTi Pro gun for suction or pressure feed duty.
- Ergonomic gun body with improved fit, feel, comfort and controls.
- Suitable for use with a suction cup or pumps, tanks or remote feed cups.
- Four compliant air cap choices to suit solids, metallics, bases and clears.
- A range of pressure & suction tip sizes for varying viscosities and control preferences.
- Balanced air valve design for ultra smooth triggering and control.
- Renowned DeVilbiss atomisation quality and even paint distribution.
- Faster, easier maintenance from user-friendly fittings and adjustments.
- Rugged drop forged body with anodised finish for protection.

Part Number Explanation

GTISPRO (or GTIPPRO) - T1 - XX

Model — Air Cap — Fluid Tip



No H1 HVLP Air Cap



No T1 Trans-Tech Air Cap



No T2 Trans-Tech Air Cap

No T4 Trans-Tech Air Cap GTiP-Pro only

Specification

Air Inlet Pressure	H1, T1, T2, T3 & T4 air caps 2.0 bar (30 psi)
Air Consumption	H1: 450 l/min (16 cfm) @ 2.0 bar (30 psi) T1: 280 l/min (10 cfm) @ 2.0 bar (30 psi) T2: 350 l/min (12 cfm) @ 2.0 bar (30 psi) T4: 330 l/min (11.7 cfm) @ 2.0 bar (30 psi) 450 l/min (15.9 cfm) @ 3.0 bar (44 psi)
Air inlet thread	Universal 1/4" BSP/NPS

Fluid inlet thread	Universal 3/8" BSP/NPS
Max static air inlet pressure	P1 = 12 bar (175 psi)
Max static fluid inlet pressure	P2 = 14 bar (203 psi)
Air cap & ring	Plated Brass
Fluid Tip & Needle	Stainless Steel
Suction gun & cup weight	1070 gms
Pressure gun weight	650 gms

GTi Pro Suction / Pressure Spray Gun Kits

When ordering please specify the air cap and tip size required.

Part No Examples	Description
GTISPRO-T1-16	Suction Feed Gun with T1 air cap and No. 16 fluid tip
GTIPPRO-T2-085	Pressure Feed Gun with T2 air cap and No. 085 fluid tip

GTI Pro kits include: suction cup with filter (suction kits only), cleaning brush, torx key, set of 4 identification rings and combination spanner

Accessories

Part No	Description
PRO-100-H1-K	HVLP Air Cap and retaining ring
PRO-100-T1-K	Trans-Tech Air Cap and retaining ring
PRO-100-T2-K	Trans-Tech Air Cap and retaining ring
PRO-100-T4-K	Trans-Tech Air Cap and retaining ring
PRO-200-**-K	Suction/Pressure Fluid Tip - Size Numbers 16, 18 & 20
PRO-315-K	Suction/Pressure Fluid Needle for 16, 18 & 20 Tip sizes
PRO-205-**-K	Pressure Fluid Tip - Size Numbers 085, 10, 12 & 14
PRO-305-085-10-K	Pressure Fluid Needle for 085 & 10 Tip sizes
PRO-305-12-14-K	Pressure Fluid Needle for 12 & 14 Tip sizes
PRO-415-1	Spray Gun Service/Repair Kit
SPN-8-K2	Torx & flat blade Screwdriver - Trigger & Needle Packing
DGIPRO-502-BAR	Digital Gauge - Reads in bars
MPV-60-K3	Male Quick Detach Uni Swivel - fits to gun air inlet
HAF-507-K12	Lightweight in-line air filter.
4900-5-1-K3	Pack of three cleaning brushes
VSA-512	Strainer Assembly



DGIPRO-502-BAR



MPV-60-K3



KR-484-K10



PRO-415-1



HAF-507-K12

** = Fluid tip size

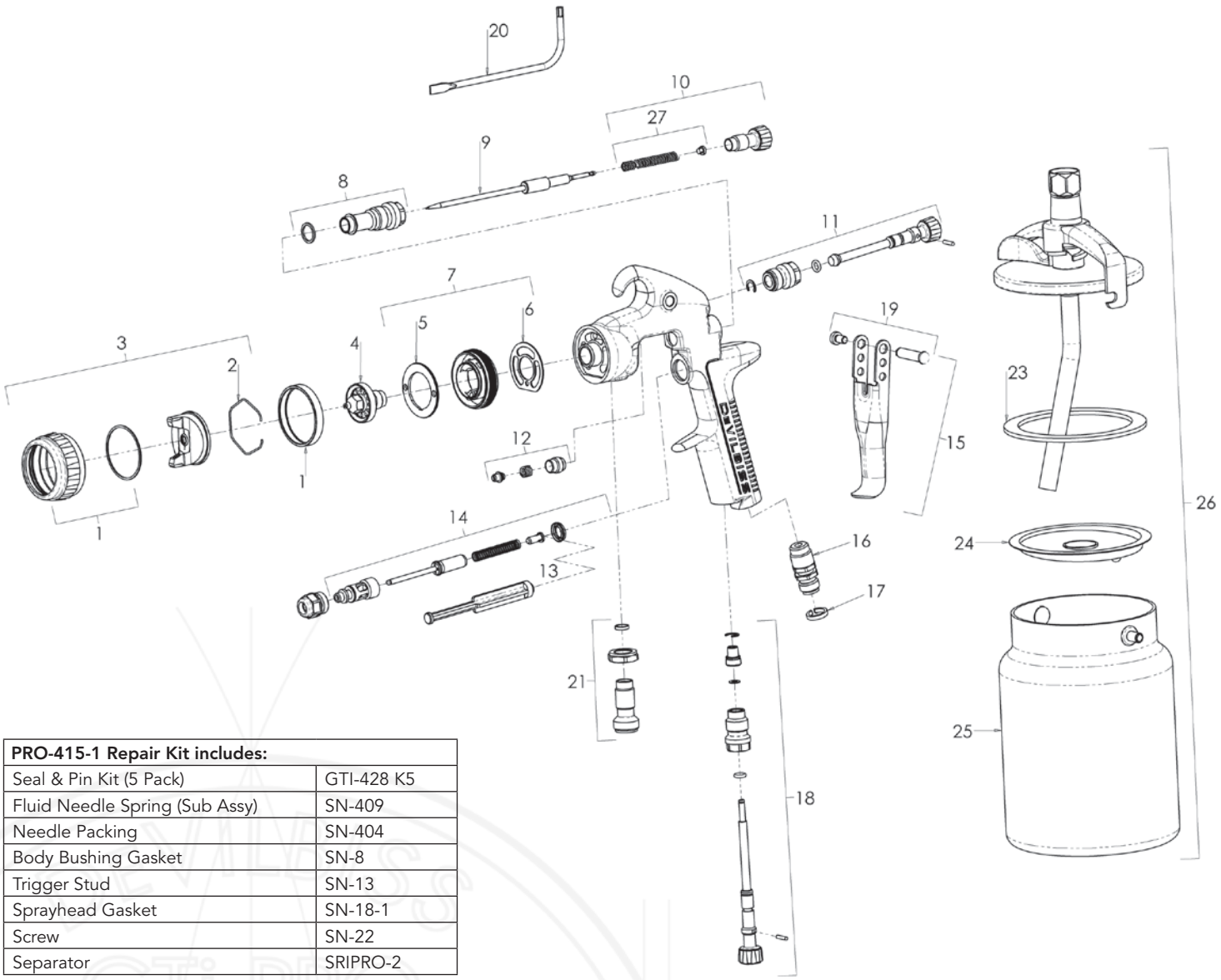

PRO-415-1 Repair Kit includes:	
Seal & Pin Kit (5 Pack)	GTI-428 K5
Fluid Needle Spring (Sub Assy)	SN-409
Needle Packing	SN-404
Body Bushing Gasket	SN-8
Trigger Stud	SN-13
Sprayhead Gasket	SN-18-1
Screw	SN-22
Separator	SRIPRO-2

Ref. No.	Description	Part No.
1	Air Cap Retaining Ring	PRO-405-K
2	Air Cap Retaining Clip	JGA-156-K5
3	Aircap & Ring	See page 22
4	Fluid Tip	See page 22
5	Baffle Plate	SN-41-K
6	Spray Head Seal (kit of 2)	SN-18-1-K2
7	Spray Head & Seal Kit	SN-17-1-K
8	Body Bushing & Seal	SN-6-K
9	Fluid Needle	See page 22
10	Fluid Adjusting Knob, Spring & Pad Kit	PRO-3-K
11	Spreader Valve Assembly	PRO-404-K
12	Packing, Spring & Packing Nut Kit	SN-404-K
13	Air Valve Seal	SN-34-K5
14	Air Valve Assembly	SN-402-K

Ref. No.	Description	Part No.
15	Trigger, Stud & Screw Kit	SN-21-K
16	Air Inlet	SN-40-K
17	Colour ID Ring Kit (4 Colours)	SN-26-K4
18	Airflow Valve	PRO-411-K
19	Stud and Screw kit	SN-405-K5
20	Torx Key	SPN-8-K2
21	Fluid Inlet Connector Kit	PRO-12-K
22	Cup Lid Assembly	KR-4001-B
23	Lid Gaskets - kit of 3	KR-11-K3
24	Drip Free Diaphragms - Kit of 5	KR-115-K5
25	Cup Only	KR-466-K
26	Complete Cup Assembly	KR-566-1-B
27	Needle spring and pad kit	SN-4-K3

COMPLIANT SUCTION & PRESSURE FEED SPRAY GUNS



- The lightweight gun, redesigned for suction or pressure feed duty.
- Ergonomic gun body design with even better fit and balance for comfort and control.
- A range of pressure & suction tip sizes for varying viscosities and control preferences.
- Four compliant air cap choices to suit all materials and coatings.
- Utilises coaxial air valve design for ultra-smooth triggering and control.
- Renowned DeVilbiss atomisation quality and even paint distribution.
- Faster, easier maintenance from user-friendly fittings and adjustments.

Part Number Explanation

PROSL - TE10 - 18

Model | Air Cap | Fluid Tip



TE10 High Efficiency Air Cap



TE20 High Efficiency Air Cap



TE30 High Efficiency Air Cap
(Pressure only)



TE40 High Efficiency Air Cap
(Pressure only)

Specification

Air Inlet Pressure	2.0 bar (29psi)
Air Consumption	TE10: 270 l/min (9.5 cfm) TE20: 360 l/min (12.7 cfm) TE30: 365 l/min (12.9 cfm) TE40: 350 l/min (12.4 cfm)
Air Inlet Thread	Universal 1/4" BSP/NPS
Fluid Inlet Thread	Universal 3/8" BSP/NPS
Max Static air inlet pressure	P1 = 12 bar (175 psi)
Max Static fluid inlet pressure	P2 = 15 bar (215 psi)

Suction Cup Capacity	1 litre
Weight (gun only)	490 gms
Weight (gun & suction cup)	925 gms
Air Cap	Plated Brass
Air Cap Retaining Ring	Clear Anodised Aluminium
Fluid Tip	Stainless Steel
Fluid Needle	Stainless Steel



DGIPRO-502-BAR

GTi Pro LITE Spray Gun Kits

When ordering please specify the air cap of your choice and the tip size of your choice.

Part No Examples	Description
PROSL-TE10-16	Suction gun & cup kit with TE10 High Efficiency air cap & #16 fluid tip
PROPL-TE40-10	Pressure gun kit with TE40 High Efficiency air cap & #10 fluid tip

GTI Pro LITE kits include: suction cup with filter (suction kits only), cleaning brush, torx key, set of 4 identification rings and combination spanner



MPV-60-K3

Accessories

Part No	Description
PRO-102-TE10-K	TE10 High Efficiency Air Cap and retaining ring
PRO-102-TE20-K	TE20 High Efficiency Air Cap and retaining ring
PRO-102-TE30-K	TE30 High Efficiency Air Cap and retaining ring
PRO-102-TE40-K	TE40 High Efficiency Air Cap and retaining ring
PRO-200-**-K	Fluid Tip – Suction feed - Size Numbers 16, 18 & 20
PRO-205-**-K	Fluid Tip – Pressure feed – Size Numbers (085, 10, 12 & 14)
PRO-325-K	Suction Fluid Needle for 16, 18 & 20
PRO-320-085-10-K	Pressure Fluid Needle for 085 & 10 tip sizes
PRO-320-12-14-K	Pressure Fluid Needle for 12 & 14 tip sizes
PRO-470	Spray Gun Service/Repair Kit
SN-406	Gun wrench, Torx & flat back screwdriver, cleaning brush and colour ID rings
DGIPRO-502-BAR	Digital gauge for air inlet fitting - Reads in bars
MPV-60-K3	Pack of three male quick detach uni swivel - fits to gun air inlet
HAF-507-K12	Lightweight in-line air filter (pack of 12)
4900-5-1-K3	Pack of three cleaning brushes
VSA-512	Strainer Assembly



HAF-507-K12



PRO-470

**** = Air Cap
** = Fluid tip size

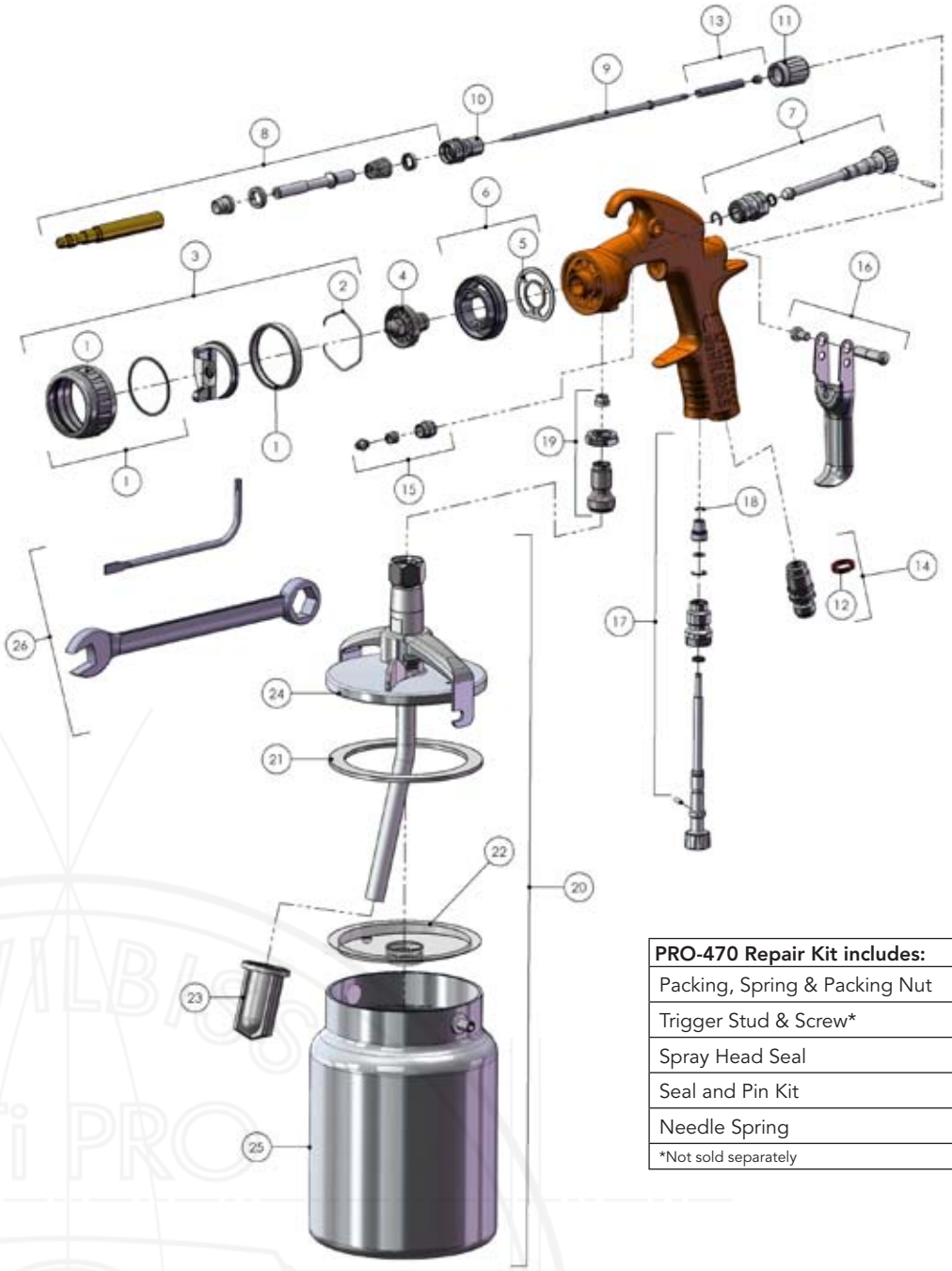

PRO-470 Repair Kit includes:	
Packing, Spring & Packing Nut	SN-404
Trigger Stud & Screw*	
Spray Head Seal	SN-18-1
Seal and Pin Kit	GTI-428-K5
Needle Spring	PRO-472
*Not sold separately	

Ref No	Description	Part Number
1	Air Cap Retaining Ring & Seal	PRO-420-K
2	Air Cap Retaining Clip	JGA-156-K5
3	High Efficiency Aircap & Ring	See Page 24
4	Fluid Tip Kit	See Page 24
5	Spray Head Seal	SN-18-1-K2
6	Spray Head Kit	SN-69-K
7	Spreader Valve Assembly	PRO-408-K
8	Air Valve Kit	PRO-471
9	Fluid Needle	See Page 24
10	Housing	SN-66-K
11	Fluid Adjusting Knob	SN-67-C-K
12	Colour ID Ring Kit (4 Colours)	SN-26-K4
13	Needle spring kit	PRO-472-K3

Ref No	Description	Part Number
14	Air Inlet Kit	SN-9-K
15	Packing, spring and packing nut kit	SN-404-K
16	Trigger, stud & Screw Kit	SP-617-CR-K
17	Airflow valve	PRO-407-K
18	Circlip - kit of 5	25746-007-K5
19	Fluid inlet kit	ADV-7-K
Suction Cup Models only		
20	Suction cup kit	KR-566-1-1B
21	Cup lid gasket - kit of 3	KR-11-K3
22	Drip check Diaphragm (kit of 5)	KR-115-K5
23	Filter - kit of 10	KR-484-K10
24	Lid assembly	KR-4001-B
25	Cup	KR-466-K

PROFESSIONAL CONVENTIONAL SUCTION & PRESSURE FEED SPRAY GUN



- Totally redesigned JGA gun for professional use.
- Renowned DeVilbiss atomisation quality and even paint distribution.
- Balanced air valve design for ultra smooth triggering and control.
- Rugged drop forged body with anodised finish for protection.
- A choice of three advanced technology air caps to suit solids and metallics.
- Three fluid tip sizes for varying viscosities and control preferences.
- Ergonomic gun body with improved fit, feel, comfort and control.
- Faster, easier maintenance from user-friendly fittings and adjustments.

Part Number Explanation

JGASPRO (or JGAPPRO) - C1 - XX

Model — Air Cap — Fluid Tip



No C1 Air Cap



No C2 Air Cap



No C3 Air Cap

Specification

Air Inlet Pressure	C1: 2.5 - 3.0 bar (30 - 45 psi) C2: 2.5 - 4.0 bar (30 - 58 psi) C3: 2.5 - 4.0 bar (30 - 58 psi)
Air Consumption	C1: 300 l/min (10.6 cfm) @ 3.0 bar C2: 305 l/min (12.8 cfm) @ 3.0 bar C3: 410 l/min (14.5 cfm) @ 3.0 bar
Air Inlet Thread	1/4" Universal

Fluid Inlet Thread	3/8" Universal
Cup Capacity	1000 mls
Weight (gun & cup, S)	1070 gms
Weight (gun, P)	650 gms
Air Cap & Ring	Plated Brass
Fluid Tip	Stainless Steel
Fluid Needle	Stainless Steel

JGA-Pro Spray Gun Kits

When ordering please specify the air cap (C1, C2 or C3) and the tip size of choice (12, 14, 16, 18 or 085).

Part No Examples	Description
JGASPRO-C1-16	Suction Feed Gun with C1 air cap and No. 16 fluid tip
JGAPPRO-C3-085	Pressure Feed Gun with C3 air cap and No. 085 fluid tip

JGA Pro kits include: suction cup with filter (suction kits only), cleaning brush, torx key, set of 4 identification rings and combination spanner

Accessories

Part No	Description
PROC-120-C1-K	C1 Air Cap and retaining ring
PROC-120-C2-K	C2 Air Cap and retaining ring
PROC-120-C3-K	C3 Air Cap and retaining ring
PROC-220-**-K	Suction Fluid Tip - Size Numbers 16 or 18
JGAPRO-330-K	Suction Fluid Needle for 14, 16 or 18 Fluid Tips
PROC-230-**-K	Pressure Fluid Tip - Size Numbers 085, 10, 12 or 14
PRO-305-085-10-K	Pressure Fluid Needle to match 085 & 10 Tip sizes
PRO-305-12-14-K	Pressure Fluid Needle to match 12 & 14 Tip sizes
PRO-415-1	Spray Gun Service/Repair Kit
SPN-8-K2	Torx & flat blade Screwdriver for - Trigger & Needle Packing
SN-406	Gun wrench, Torx & flat back screwdriver, cleaning brush and colour ID rings
DGIPRO-502-BAR	Digital Gauge - Reads in bars
MPV-60-K3	Male Quick Detach Uni Swivel - fits to gun air inlet
HAF-507-K12	Lightweight in-line air filter.
4900-5-1-K3	Pack of three cleaning brushes
KR-484-K10	Pack of 10 suction cup paint strainers
VSA-512	Strainer Assembly



DGIPRO-502-BAR



MPV-60-K3



KR-484-K10



PRO-415-1

** = Fluid tip size

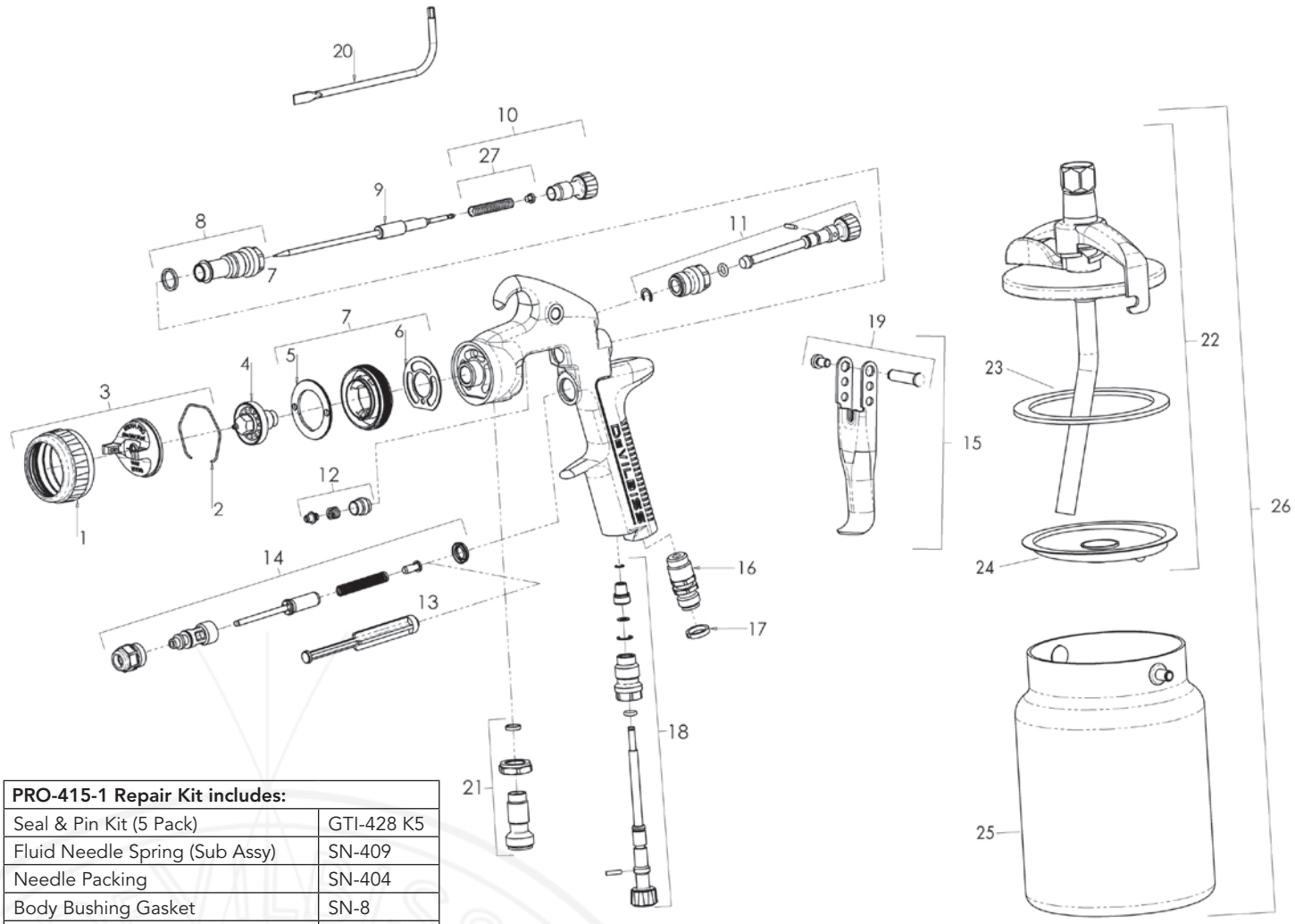

PRO-415-1 Repair Kit includes:	
Seal & Pin Kit (5 Pack)	GTI-428 K5
Fluid Needle Spring (Sub Assy)	SN-409
Needle Packing	SN-404
Body Bushing Gasket	SN-8
Trigger Stud	SN-13
Sprayhead Gasket	SN-18-1
Screw	SN-22
Separator	SRIPRO-2

Ref. No.	Description	Part No.
1	Air Cap Retaining Ring	PRO-405-K
2	Air Cap Retaining Clip	JGA-156-K5
3	Aircap & Ring	See page 26
4	Fluid Tip	See page 26
5	Baffle Plate	SN-41-K
6	Spray Head Seal (kit of 2)	SN-18-1-K2
7	Spray Head & Seal Kit	SN-17-1-K
8	Body Bushing & Seal	SN-6-K
9	Fluid Needle	See page 26
10	Fluid Adjusting Knob, Spring & Pad Kit	PRO-3-K
11	Spreader Valve Assembly	PRO-404-K
12	Packing, Spring & Packing Nut Kit	SN-404-K
13	Air Valve Seal	SN-34-K5
14	Air Valve Assembly	SN-402-K

Ref. No.	Description	Part No.
15	Trigger, Stud & Screw Kit	SN-21-K
16	Air Inlet	SN-40-K
17	Colour ID Ring Kit (4 Colours)	SN-26-K4
18	Airflow Valve	PRO-411-K
19	Stud and Screw kit	SN-405-K5
20	Torx Key	SPN-8-K2
21	Fluid Inlet Connector Kit	PRO-12-K
22	Cup Lid Assembly	KR-4001-B
23	Lid Gaskets - kit of 3	KR-11-K3
24	Drip Free Diaphragms - Kit of 5	KR-115-K5
25	Cup Only	KR-466-K
26	Complete Cup Assembly	KR-566-1-B
27	Needle spring and pad kit	SN-4-K3

SLG-620 GENERAL PURPOSE BUDGET SPRAY GUN



- General purpose gravity feed compliant spray gun.
- Lightweight and strong aluminium construction.
- Smooth fluid flow and pattern shape controls.
- Ergonomically shaped handle for postitive grip.
- Precision engineered brass air cap provies excellent atomisation of most popular compliant automotive refinish materials.
- Fitted with a tough Acetal 550ml cup.
- The kit includes: a removable paint filter, a cleaning brush and universal spanner for easy cleaning and maintenance

Specification

Air Inlet Pressure	2.0 Bar
Air Consumption	250 l/min (8.8 cfm)
Air Inlet Thread	1/4" Universal
Cup Capacity (gravity)	550ml
Weight (gun & cup)	Gun 480g / Cup 160g
Air Cap	Brass - Nickel Plated
Retaining Ring	Anodised Aluminium
Fluid Tip	Stainless Steel
Fluid Needle	Stainless Steel

Part No	Description
SLG-620-13	Gravity Gun with 1.3mm fluid tip
SLG-620-18	Gravity Gun with 1.8mm fluid tip
SLG-450	Gravity Cup and Lid







PRO CLEAN GUN WASH CLEANING MACHINE

- Faster, cleaner and more efficient than conventional gun wash machines.
- Can be used for waterborne and solvent applications.
- Significantly reduces solvent use and wastage dramatically reducing gun cleaning costs.
- Fresh solvent is used every time ensuring no contamination and rapid colour changes.
- The compact unit can be wall mounted to maximise floor space in the mix room.
- 500ml colour coded waterborne and solvent aerosols are easily clipped in and out of the machine.
- One 500ml can will clean up to 32 spray guns.



Part Number: DEV-FHAZ1006

Specification

Dimensions	H: 900 mm W: 245 mm D: 275 mm
Weight	9 kg
Max Air Pressure	8 bar (116 psi)
Min Air Pressure	6 bar (86 psi)
ATEX Safety Approval	CE Ex II 3G c IIA T6



Pro Clean Gun Wash Machine

Part No	Description
DEV-FHAZ1006	Complete Pro Clean unit
DEV-FHFZ1004	Pro Clean Waterborne Aerosol
DEV-FHFZ1013	Pro Clean Solvent Aerosol



SAVE TIME: Less than a minute for a completely clean spray gun

SAVE COST: One 500ml can of cleaner will clean up to 32 spray guns

SAVE SPACE: Can be wall mounted to keep the floor space clear

SAVE WASTE: Highly efficient, less than 16 ml of cleaning solution to clean a gun

SHiM-MASK by DeVILBISS

STAINLESS STEEL MASKING STENCIL TO PREVENT RUB-THROUGH WHEN SANDING OR SHAVING MINOR SURFACE IMPERFECTIONS

Ideal for:

- Paint and lacquer runs.
- Imperfections.
- Minimising area when sanding paint-filled chips or scratches.

Advantages:

- Stainless steel 304 provides hardness for re-use.
- Chemically etched shapes eliminates burred edges.
- Choice of four stencil shapes.



Specification

Dimensions	H: 100 mm D: 90 mm W: 1 mm
Weight	13g each

Shim Mask

Part No	Description
SHIM-3	Pack of three stainless steel shim masks











DMG AIR DRYER GUNS AND SYSTEMS

- **A versatile system to speed up the drying process.**
- **DMG guns multiply their intake by a factor of 7 to give generous air volumes.**
- **A fully adjustable aerodry stand provides full dryer flexibility.**
- **Solvent resistant for cleaning in gun wash machines.**
- **DMG guns feature intake debris filters and shut-off valves.**

Specification

Air consumption per gun at 3.4 bar (50psi)	325 l/min (11.5cfm)
Recommended working pressure range	2-4 bar (30 – 60 psi)
Noise level at 3.4 bar (50psi)	83 dba

DMG Air Dryer Systems

Part No	Description
DMG-501-K	Single Air Dryer gun – boxed
DMG-620	Two gun stand system with hose



Accessories

Part No	Description
DMG-5-K3	Pack of 3 dryer inlet filters
DMG-520-K	Air dryer stand and hose
H-6086-B	10m Air hose with female quick detach and swivel/loose nut fittings
MPV-424	Female, self sealing, QD air line fitting
MPV-5	Male stem, QD air line fitting with 1/4" BSP (F)



Ref No	Description	Part Number
1	Single Air Dryer Gun	DMG-501-K
2	Female QD	MPV-424
3	Filter pack of 3	DMG-5-K3

DGi Pro® by DeVILBISS

DGi Pro® pod

- Perfectly positioned for easy checking.
- Accurate digital "bar" read-out of working pressure.
- Retrofits to GTi Pro or PRi Pro gravity guns.
- Optimise your gun performance as you work.
- Accurate readings to within 0.05 bar (0.7 psi).
- Fully ATEX Approved – totally gun washer safe.
- Air flow "cheater" valve adjusts the gauge.
- Fitted in minutes - replaces standard spreader valve.



DGIPRO-503-BAR-K
(For GTi Pro)



DGIPRO-504-BAR-K
(For GTi Pro LITE)

DGi Pro®

- Digital air pressure gauge and control valve.
- Resolution steps in increments of 0.05 bar.
- Ultra smooth action control valve.
- Fits directly to gun air inlet.
- 1/4" Universal threads – swivel nut at outlet.
- Fully ATEX Approved – totally gun washer safe.
- Fits in line or directly onto tools and supply lines.
- Very tough to withstand bodyshop duty.
- Lasts many times longer than analogue dial units.



DGIPRO-502-BAR

Specification	
Air Connections (M & F)	1/4" Universal (BSP/NPS)
Accuracy	+ or – 1%
Resolution steps	0.05 bar (0.7 psi)
Max static inlet pressure	12 bar (175 psi)
Housing	Die cast aluminium, nickel/chrome plated.
Readout window	Toughened glass
ATEX safety approval	CE Ex 11 1G EEx ia IIC T4

Part numbers	
DGIPRO-503-BAR-K	DGi PRO pod gauge - Retrofit to GTI Pro guns only
DGIPRO-504-BAR-K	DGi PRO pod gauge - Retrofit to GTI Pro LITE guns only
DGIPRO-502-BAR	DGI Pro Air inlet gauge & adjusting valve

Spare parts	
SN-52-K5	DGI Pro adjusting valve seals
MPV-60-K3	Male quick detach swivel
SN-57-K5	Air inlet aperture inserts

DISPOSABLES: US PATENT NOS. 6,820,824 AND 7,374,111 OWNED BY 3M INNOVATIVE PROPERTIES CO.
ADDITIONAL US PATENTS: NOS. 7,353,964; 7,344,040; 7,086,549
EUROPEAN PATENT NO. 0 954 381 B2 OWNED BY 3M INNOVATIVE PROPERTIES CO.

RE-USABLES: U.S. PATENT NOS. 6,820,824 AND 7,374,111 OWNED BY 3M INNOVATIVE PROPERTIES CO.
ADDITIONAL U.S. PATENTS: NOS. 7,380,680; 7,354,074; 7,353,964; 7,350,418; 7,344,040; 7,263,893; 7,165,732; 7,086,549.

DEKUPS by DEVILBISS

DEKUPS DISPOSABLE PAINT CUPS SYSTEMS

- Stable and positive cup to gun location.
- Consistent paint flow, reduced risk of spray performance changes.
- Practical 710cc size gives ideal weight to quantity ratio.
- Choice of disc filters for waterborne basecoats or washable stick filters for clears and primers.
- Supplied in convenient wall mounting dispenser packs.
- Lightweight gun adaptor with spiral lock mechanism.
- No threads on outer cup lids to get contaminated and stubborn.
- Storage plugs for liners supplied in the kit.
- Funnels for liner top ups and gun flushing bottles available.



Part No	Description
DPC-601	DeKups disposable cup system kit – 32 disposable liners, 32 disposable lids
DPC-606	Reusable lid and sleeve kit
DPC-602	9oz. disposable lids & liners
DPC-607	9oz. re-usable lid & sleeve kit



DPC-607

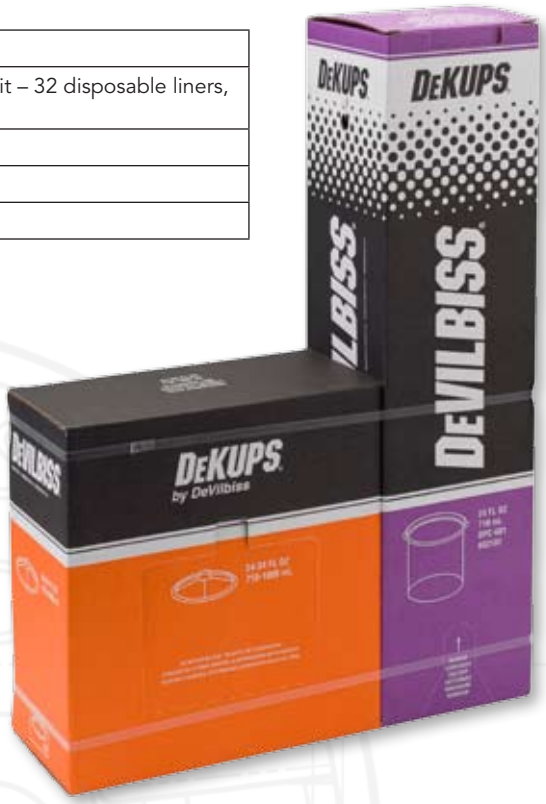

Part No	Description
DPC-10	Adaptor for SATA NR 2/3000, RP, KLC, MCB & Jet 90 series & Sata 96719
DPC-11	Adaptor for SATA NR95, Iwata LPH-400 & W400LV
DPC-13	Adaptor for Sagola (DeKup)
DPC-23	Adaptor 9oz – for SRI PRO
DPC-502	Adaptor for SATA Minijet QCC
DPC-78	Adaptor For Iwata Supernova
DPC-80	Adaptor for DeVilbiss Pro LITE, GTi, PRI, GFG, Binks M1G, Sharpe Cobalt, Platinum & Titanium
DPC-501	Adaptor for SATA QC

Part No	Description
DPC-42-K20	Disc Filet Kit – 125 micron filter screen
DPC-27-K10	Stick Filter – 200 micron filter screen
DPC-65-K24	9.oz 125 micron Disc Filter (24 Pack)
DPC-6-K10	Plug Kit (Pack Of 10)
DPC-22-K3	Disposable funnel
DPC-8-K2	Cleaning Bottle
DPC-60-K10	9oz. Measuring Guide (10 Pack)
DPC-62-K10	Measuring guide 2:1 & 3:1
DPC-63-K10	Measuring guide 4:1 & 5:1

DIRT CONTROL FLOOR COAT



Benefits

- Reduces airborne particles in the spray booth by over 50% and traps them on the floor.
- Significantly reduces de-nibbing and polishing time caused by dirt in the paint job.
- Significantly reduces dust and dirt in the booth.
- Perfect for portable/smart repair booths.

Easy To Use

- Fast and easy once-a-day application using a pump sprayer.
- Simply sweep up the dirt and overspray with a broom and apply Dirt Control Floor Coat.
- One 5 US gallon bucket should provide approximately 20 applications.

Innovative

- Floor Coat neutralises particles' electrical charge, allowing them to stick together.
- Traps particles on the floor, not on the vehicle.
- Water-based, low VOC.

Part Number	Description
DC-FC-5	Dirt Control Floor Coat (5 US gals)
DC-PS-1	DeVilbiss Floor Coat Pump Sprayer



OVERALLS

Benefits

- Built in hood with pull cords.
- Vented under arm and back.
- Front and rear pockets with Velcro fastening.
- Elasticated waistband and cuffs for improved fit and operator comfort.
- Front knee pockets with Velcro fasteners for insertion of kneeling pads.
- Full length zip front fastening.
- Anti Static.
- Lint Free.
- Lightweight and comfortable to wear.
- Reusable.
- Washable.

Part Number	Description
DC-OV-M	Medium overall
DC-OV-L	Large overall
DC-OV-XL	Extra large overall
DC-OV-XXL	Extra extra large overall

NEW FOR 2015

THE HIGH EFFICIENCY CONSUMABLES RANGE by DeVILBISS

ANTI-STATIC WIPE

Single-use treated wipe to eliminate static between refinish coats.



Benefits

- Reduces dirt imperfections on plastic parts caused by static.
- Lint free.
- No VOCs.

Easy To Use

- Simply wipe over the entire panel before spraying.

Innovative

- Improved metallic orientation from reduction of static charges which can cause metallics to orientate incorrectly.

Directions For Use

- NOTE: For best results, the wipe must make contact with entire surface to be sprayed. USE DRY ONLY.
  1) Carefully wipe the entire surface to be sprayed with the DeVilbiss CLEAN™ Anti-Static Wiper.
  2) For best results, use even, firm, overlapping strokes as if you were spraying the surface.



Part Number	Description
DC-ASW-K12	Box of 12 individually packed Anti-Static Wipers

BUMPER PREP PAD

Single-use pre-saturated scuff pad for new unprimed bumpers or plastic parts.



Benefits

- Reduces steps in bumper preparation processes, increasing efficiency.
- Provides comprehensive abrasion for better paint adhesion.
- Removes water-based and oil-based contaminants.

Easy To Use

- DeVilbiss CLEAN™ Bumper Prep Pad cleans, abrades and degreases in one easy step.
- Simply soak in water to activate the pad and start prepping your bumper.

Innovative

- The Bumper Prep Pad provides a more consistent scratch pattern and greatly improves paint adhesion.
- Additional preparation products may not be needed as the Bumper Prep Pad cleans, abrades, and degreases in one easy step.

Part Number	Description
DC-BPP-K12	Box of 12 individually packed Bumper Prep Pads

Pro Visor by DeVILBISS

- **Gun supply hose swivels both radially and laterally, ensuring better spray dynamics without the hose restricting the sprayers movement.**
- **Left or right sided waist belt fitment without having to change the air fitting configuration.**
- **The Pro Visor disperses breathing air gently around the lightweight visor at a positive pressure with no misting or discomfort, ensuring every sprayer can work at their best.**
- **The wrap around visor provides excellent and much wider peripheral vision than sprayers will be used to, while the removable peak can help reduce glare from spray booth lighting.**



Specification

Protection:	APF = 40 / NPF = 200
Carbon Filter Life:	3 months
Supply Pressure:	4.0 bar (60 psi) minimum to 7.0 bar (100 psi) maximum
Air Flow Rate:	128 – 160 l/min (4.5 – 5.7 SCFM)
Noise level @ 160 l/min:	69.7 db
Approvals:	PPE directive 89/686/EEC. Conforms to EN 14594:2005 Class 3A
Zone Classifications:	Suitable for use in Zones 1 and 2 Hazardous Areas (gas groups IIA and IIB)

Pro Visor Outfit

PROV-600	Complete air fed visor outfit with waistbelt

Accessories

Part No	Description
PROV-20-K	Belt & regulator
PROV-21-K	Peak
PROV-22-K10	Peel off visors pack of 10
PROV-22-K50	Peel off visors pack of 50
PROV-23-K	Belt and buckle
PROV-25-K	Acetate visor face seal and air tube
PROV-26-K	Storage bag
PROV-27-K4	Filter element (pk 4)
PROV-28-K4	Comfort brow band (pk 4)
PROV-29-K	Visor head piece & breathing tube
PROV-30-K	Spacers & knobs (16 items - 1 set)
PROV-31-K	Filter cap & seal
PROV-32-K	Y-piece assembly
PROV-33-K	QD connector with reducer
PROV-406-K	Gun hose (1.2 m)
H-6085-QD	10 metre length air-hose complete with male and female QD's
H-6065-B	10 metre length air hose complete with re-usable fittings.
MPV-424	Female self-sealing, QD air line fitting
MPV-10	Male-stem, QD air line fitting with 1/4" BSP (M)
MPV-5	Male-stem, QD air line fitting with 1/4" BSP (F)
MPV-462	Female self-sealing QD fitting with 1/4" BSP (F)
MPV-463	Kit of 4 QD's fittings (2 male and 2 females)



MPV-463



PROV-21-K



PROV-27-K4



PROV-22-K10



MPV-60-K3

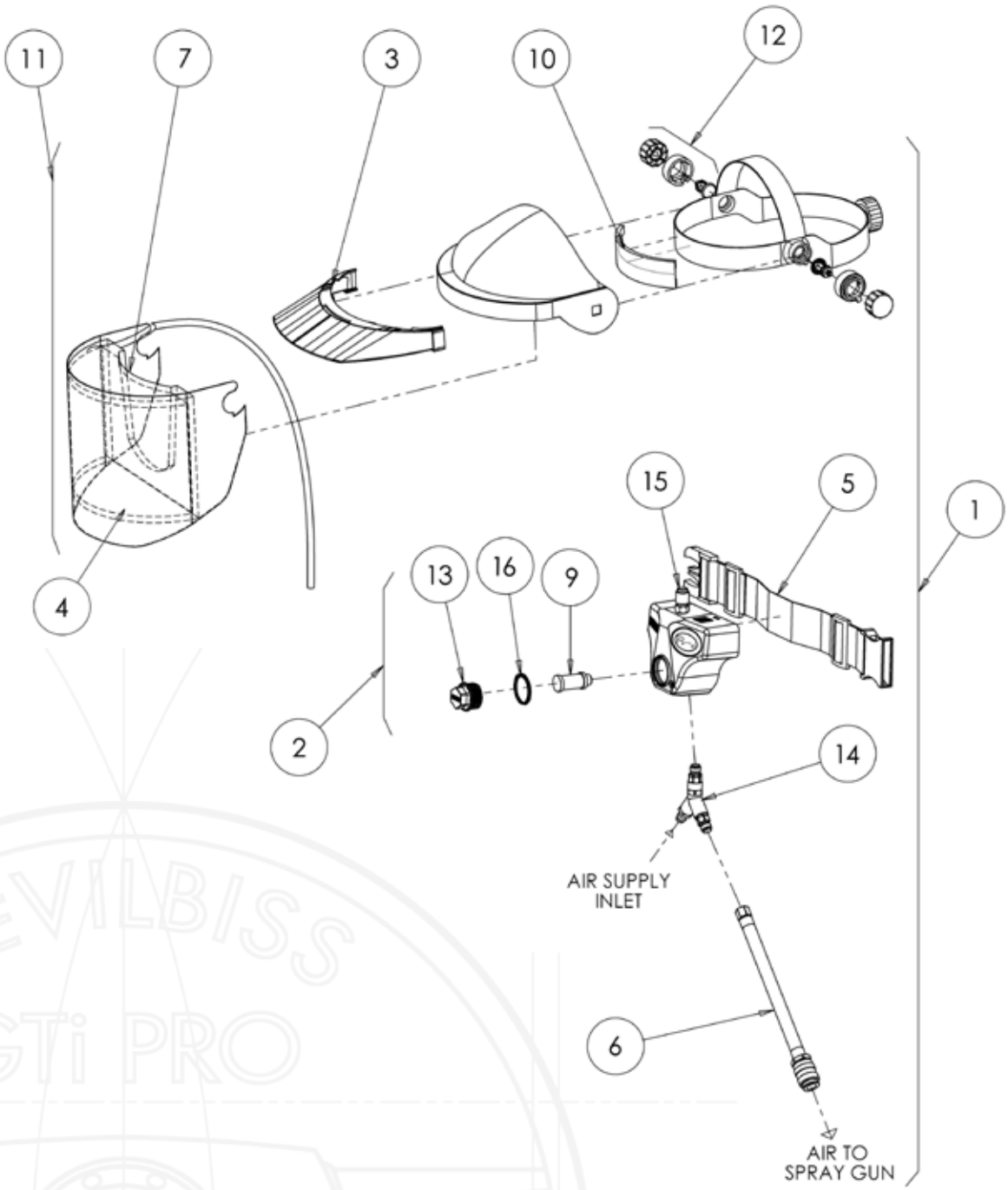

Ref No	Description	Part Number
1	Pro Visor complete unit	PROV-600
2	Belt & Regulator	PROV-20-K
3	Peak	PROV-21-K
4	Tear-off visors pack of 10	PROV-22-K10
	Tear-off visors pack of 50	PROV-22-K50
5	Belt and buckle	PROV-23-K
6	1.2m Hose (To Spray Gun)	PROV-406-K
7	Rigid acetate visor face seal and air tube	PROV-25-K
8	Storage bag	PROV-26-K
9	Filter element (Pack 4)	PROV-27-K4

Ref No	Description	Part Number
10	Comfort brow band (Pack 4)	PROV-28-K4
11	Visor head piece & breathing air tube	PROV-29-K
12	Spacer, stud & knob (set of all sizes)	PROV-30-K
13	Filter cap & seal	PROV-31-K
14	Y-Piece Assembly	PROV-32-K
15	Connector	PROV-33-K
16	Filter Cap Seal	PROV-34-K4
Hoses		
	10m Air hose - 5/16"ID male & female QD's	H-6085-QD
	10m Air hose - 5/16"ID	H-6065-B

COMPLETE AIR-FED HALF-MASK OUTFIT

- **A single airline supplies breathing and spraying air.**
- **One piece high specification goggles are included.**
- **The facepiece incorporates dual exhalation valves and an air inlet diffuser.**
- **Waistbelt incorporates odour filter and pre-set mask air regulator.**
- **Outfit includes high quality gun hose (1.2m x 8mm bore).**



Specification

Protection	APF=20
Carbon Filter Life	1000 hours
Supply Pressure	3.8 bar (55 psi) - At hose supply connection max 7 bar (100 psi)

MPV-627 Outfit

Part No	Description
MPV-627	Complete air-fed half-mask outfit

Accessories

Part No	Description
MPV-506-2	Complete half-mask with cotton rimlet, hood & air tube
MPV-4006	One piece protective goggles for use with half mask
MPV-486	Half mask rubber facepiece only
MPV-489-K2	Half-mask exhalation valve
MPV-17-K10	Cotton mask-to-face rimlet-kit of 10
MPV-487	Rubber strap harness for half mask
MPV-488	Half-mask clear air tube assembly with mini QD fitting
H-6085-QD	10 metre length air hose complete with male and female QD's
H-6065-B	10 metre length air hose complete with re-usable fittings
MPV-518	Complete waistbelt with regulator, filter cartridges & QD's
MPV-22	Replaceable waistbelt filter cartridge
MPV-455	Waistbelt regulator (does not include belt or QD)
MPV- 519	Waistbelt filter housing
MPV-2-K5	Disposable elasticated protective hood – kit of 5
MPV-456	Rubber spray gun hose (4' long, 5/16" bore with QD fittings)
MPV-458	Stowage bag for masks or visors
MPV-424	Female, self-sealing, QD air line fitting
MPV-10	Male stem, QD air line fitting with 1/4" BSP (M)
MPV-5	Male stem, QD air line fitting with 1/4" BSP (F)
MPV-462	Female self sealing QD fitting with 1/4" BSP (F)
MPV-463	Kit of 4 QD's fittings (2 male and 2 female)
MPV-442	Female miniature QD fittings for waistbelt to mask / visor
MPV-20	Male miniature QD stem for waistbelt to mask / visor



MPV-4006



MPV-22



MPV-463



MPV-60-K3



H-6085-QD

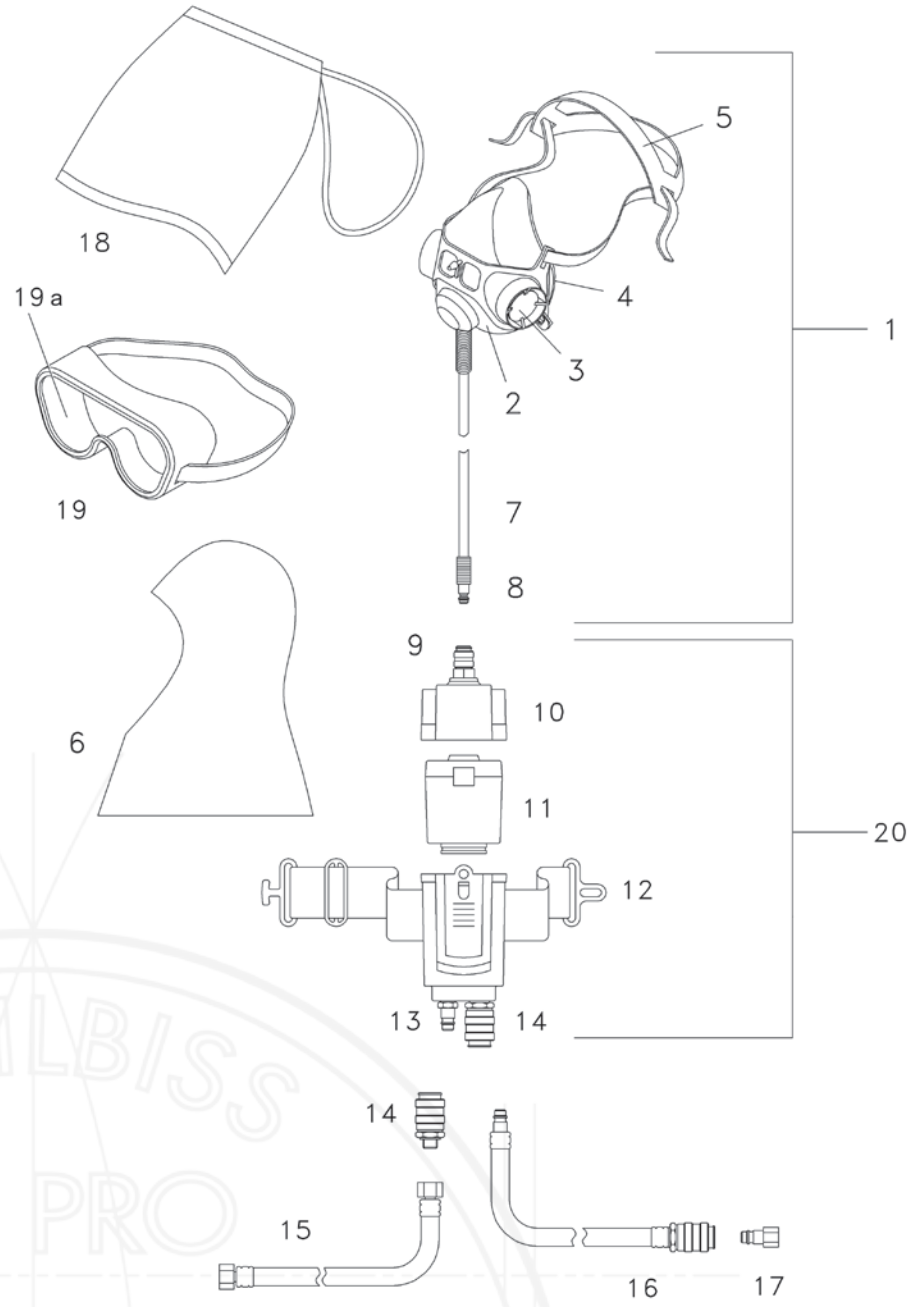

Ref No	Description	Part No.
1	Mask Assembly (ref nos 2-8)	MPV-506-2
2	Facepiece	MPV-486
3	Exhalation Valve (kit of 2)	MPV-489-K2
4	Kit of 10 cotton rimlets	MPV-17-K10
5	Harness	MPV-487
6	Hoods (kit of 5)	MPV-2-K5
7	Tube and mask diffuser assembly	MPV-488
8	Quick detachable stem	MPV-20
9	Quick detachable connector	MPV-442
10	Regulator and housing	MPV-455
11	Disposable filter	MPV-22
12	Waistbelt & filter housing	MPV-519

Ref No	Description	Part No.
13	Quick detachable stem	MPV-10
14	Quick detachable connector	MPV-424
15	10m length M-F QD Fittings #	H-6085-QD
	10m length 1/4" Re-usable Fittings #	H-6065-B
16	Gun hose assembly	MPV-456
17	Quick detachable stem	MPV-5
18	Stowage bag	MPV-458
19	Goggle	MPV-4006
19a	Goggle protection strip (kit of 10)	MPV-59-K10
20	Waistbelt assembly	MPV-518
# Not part of outfit, order separately		

"VALUAIR" HALF-MASK RESPIRATOR



- **Lightweight, soft, pliable facepiece.**
- **Easy bayonet fitting filter cartridges.**
- **Comfortable elasticated / moulded headstrap cradle.**
- **Replaceable A2 specification cartridges supplied as standard.**
- **Pre filters to extend the service life of the main filter cartridges.**

Specification – A2 Filters

A2 filters are for use against organic vapours with boiling points above 650°C.

The Valuair mask with A2 filter cartridges can therefore be used in areas of contamination up to 10 x the Occupational Exposure levels set by the Health and Safety Executive.

Suitable for use with cellulose paints, primers, lacquers and varnishes but not suitable for use with Isocyanates.

Assigned Protection Factor of 10.

Part No	Description
MPV-629	Valuair Cartridge Mask complete with A2 Filter cartridges and pre-filters
MPV-492	Pair of pre-filter covers plus ten filter pads
MPV-494-K2	Pack of two A2 specification filter cartridges
MPV-4006	One piece protective goggles for use with half masks

"FREEDOM" HALF-MASK RESPIRATOR



- **Lightweight, dual filter, semi-disposable half mask respirator.**
- **Can be used up to a maximum of 28 days.**
- **Maintenance free and requires no spare parts.**
- **Low nose bridge helps to accommodate goggles for optimum vision.**
- **Headstrap has no buckles or fasteners and is comfortable and easy to use.**

Specification – A2 Filters

A2 filters are for use against organic vapours with boiling points above 650°C.

The Freedom mask with A2 filter cartridges can therefore be used in areas of contamination up to 10 x the Occupational Exposure levels set by the Health and Safety Executive.

Suitable for use with cellulose paints, primers, lacquers and varnishes but not suitable for use with Isocyanates.

Assigned Protection Factor of 10.

Part No	Description
MPV-496	Freedom Cartridge Mask complete with A2 Filter cartridges
MPV-4006	One piece protective goggles for use with half masks

AVAILABLE SPRING 2015



PRO AIR-1 FILTER REGULATOR

- **Rolling diaphragm gives rapid response and sensitive air pressure control.**
- **Provides air filtered to 5 microns.**
- **Maximum airflow 3500 l/min (124 cfm).**
- **Three ball valve controlled outlets.**
- **Tamperproof, removable and lockable air pressure control knobs.**

Specification

Air Inlet Thread	1/2" BSP (F)
Regulated Outlets	3 Valved
Unregulated Outlets	N/A
Air Outlets (Ball Valves)	1/ 4" BSP (M)
Width (Overall)	175mm (6.9")
Height (Overall)	280mm (11")
Weight	2500 gms (88oz)
Capacity (maximum air flow)	3500 l/min (124cfm)
Maximum Air Inlet Pressure	13 bar (189 psi)
Maximum Regulated Outlet Pressure	0-8 bar (0-116psi)
Pressure Gauge	0-11 bar (0-160 psi)
Gauge port	1/8" BSP (F)
Air Filtration	Down to 5 microns
Drain Valve	Semi-Automatic
Maximum Pressure Drop	5% of Inlet Pressure
Maximum Operating Temperature	80°C (176°F)

Pro Air-1 Regulator

Part No	Description
PROAIR-1	3 Outlet Filter Regulator (90 cfm)
DV-9420601	Filter bowl removal tool

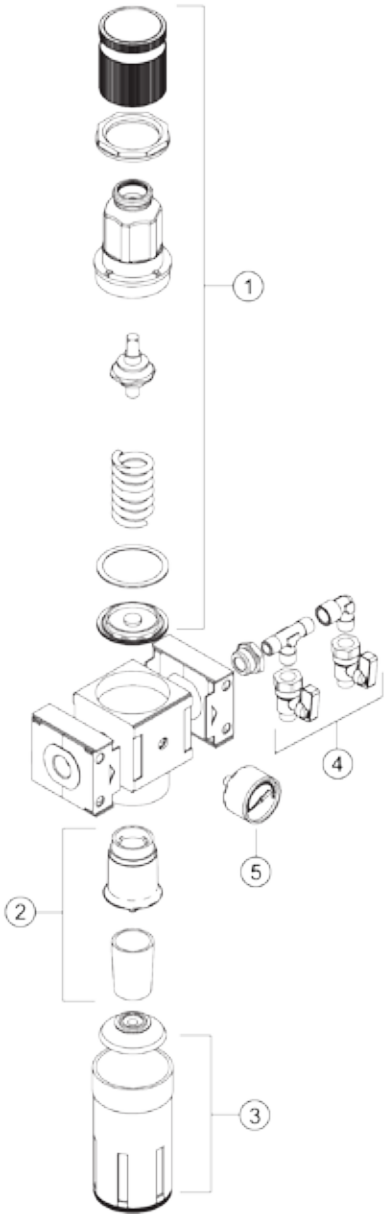

Ref No	Description	Part Number
1	Upper Cover Assembly	PROAIR-71
2	Filter (Air)	PROAIR-51
3	Metal Filter Bowl	PROAIR-72
4	Ball Valve	SER-3414-MF
5	Pressure Gauge	GA-319

(See Page 58 & 59 for current DVFR Range)

AVAILABLE SPRING 2015

PRO AIR-2 FILTER REGULATOR COALESCER



- **High air flows for conventional and compliant spray guns.**
- **Provides air filtered to 0.01 microns suitable for air-fed respiratory outfits.**
- **Maximum airflow of 3500 l/min (124cfm).**
- **Three ball valve controlled outlets.**
- **Rolling diaphragm gives rapid response and sensitive air pressure control.**

Specification

Air Inlet Thread	1/2" BSP (F)
Regulated Outlets	3 Valved
Unregulated Outlets	N/A
Air Outlets (Ball Valves)	1/ 4" BSP (M)
Width (Overall)	240mm (9.5")
Height (Overall)	280mm (11")
Weight	3200 gms (113oz)
Capacity (maximum air flow)	3500 l/min (124cfm)
Maximum Air Inlet Pressure	13 bar (189 psi)
Maximum Regulated Outlet Pressure	0-8 bar (0-116psi)
Pressure Gauge	0-11 bar (0-160 psi)
Gauge port	1/8" BSP (F)
Air Filtration	Down to 0.01 microns *
Drain Valve	Semi-Automatic
Maximum Pressure Drop	10% of Inlet Pressure
Maximum Operating Temperature	80°C (176°F)

* Suitable for Breathing Air

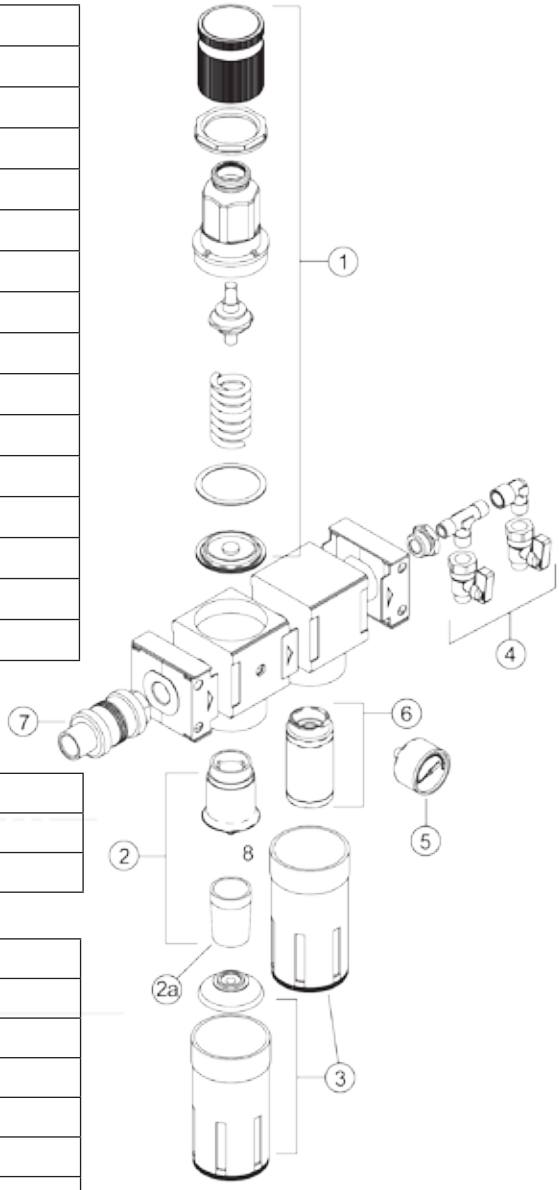

Pro Air-2 Regulator

Part No	Description
PROAIR-2	3 Outlet Filter Regulator Coalescer (50 cfm)
DV-9420601	Filter bowl removal tool

Ref No	Description	Part Number
1	Upper Cover Assembly	PROAIR-71
2	Filter (Air)	PROAIR-51
2a	Filter Element Only	-
3	Metal Filter Bowl	PROAIR-72
4	Ball Valve	SER-3414-MF
5	Pressure Gauge	GA-319
6	Fine Filter (Oil)	PROAIR-52
7	Isolation Valve	DV-8000035
8	Filter Kit (Includes Items 2, 6)	PROAIR-62

(See Page 58 & 59 for current DVFR Range)

AVAILABLE SPRING 2015

PRO AIR-3 FILTER REGULATOR COALESCER WITH ACTIVATED CARBON FILTER



- High air flows for conventional and compliant spray guns.
- Provides air filtered to 0.01 microns suitable for air-fed respiratory outfits.
- Activated carbon filter removes oil carry over to 0.003 microns.
- Maximum airflow of 3500 l/min (124cfm).
- Three ball valve controlled outlets.
- Rolling diaphragm gives rapid response and sensitive air pressure control.

Specification

Air Inlet Thread	1/2" BSP (F)
Regulated Outlets	3 Valved
Unregulated Outlets	N/A
Air Outlets (Ball Valves)	1/ 4" BSP (M)
Width (Overall)	305mm (12")
Height (Overall)	280mm (11")
Weight	3.3kg
Capacity (maximum air flow)	3500 l/min (124cfm)
Maximum Air Inlet Pressure	13 bar (189 psi)
Maximum Regulated Outlet Pressure	0-8 bar (0-116psi)
Pressure Gauge	0-11 bar (0-160 psi)
Gauge port	1/8" BSP (F)
Air Filtration	Down to 0.01 microns *
Drain Valve	Semi-Automatic
Maximum Pressure Drop	10% of Inlet Pressure
Maximum Operating Temperature	80°C (176°F)

* Suitable for Breathing Air

Pro Air-3 Regulator

Part No	Description
PROAIR-3	3 Outlet Filter Regulator Coalescer with activated carbon filter
DV-9420601	Filter bowl removal tool

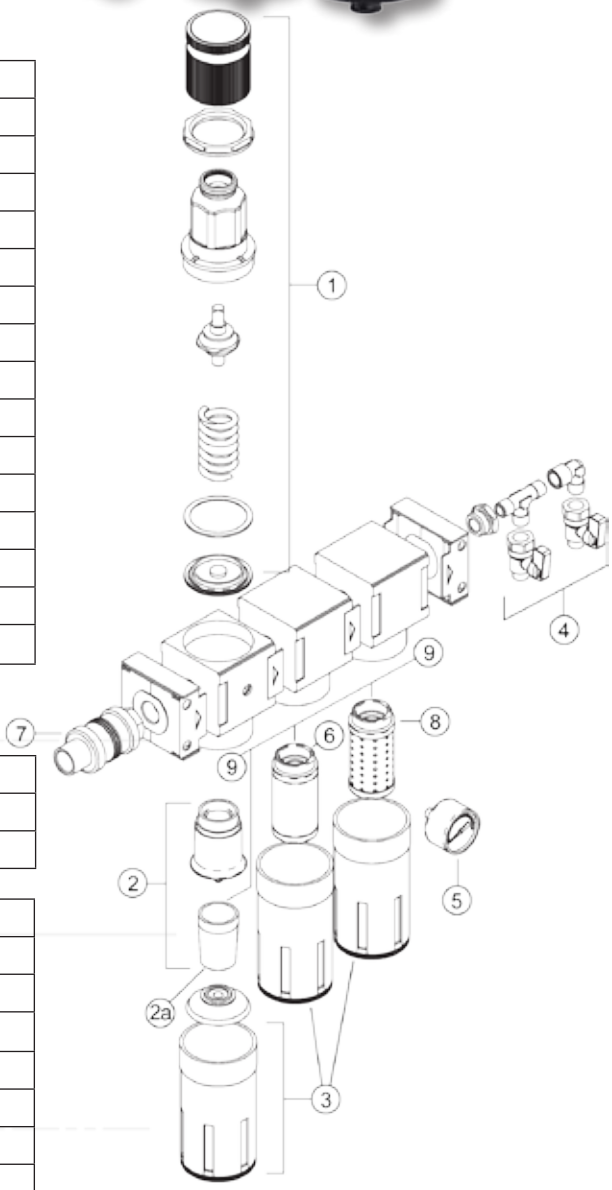

Ref No	Description	Part Number
1	Upper Cover Assembly	PROAIR-71
2	Filter (Air)	PROAIR-51
2a	Filter Element Only	-
3	Metal Filter Bowl	PROAIR-72
4	Ball Valve	SER-3414-MF
5	Pressure Gauge	GA-319
6	Fine Filter (Oil)	PROAIR-52
7	Isolation Valve	DV-8000035
8	Activated Carbon Filter	PROAIR-53
9	Filter Kit (Includes Items 2, 6, 8)	PROAIR-63

(See Page 58 & 59 for current DVFR Range)

ECONOMY FILTER REGULATORS AND COALESCERS


FLFR-1

FLFR-1 Filter Regulator

- Air filtration down to 20 microns.
- High quality manufacture.
- Air flow of 70cfm (at 7 bar – 100psi inlet pressure).
- Lockable and removable (tamperproof) control.

Please Note: Economy Regulators are not suitable for low bake temperatures.

FLCF-1 Coalescing Filter

- A 3/8" (port size) coalescing (fine oil) filter.
- Air filtration down to 0.01 microns.
- Replaceable filter element.
- Maximum working pressure 18 bar (260 psi).


FLCF-1


FLRC-1

FLRC-1 – Filter Regulator Coalescer

- Compact, low cost single operator Filter Regulator and Coalescer.
- Filtration down to 0.01 microns suitable for air mask or visor.


FLRCAC-1

FLRCAC-1 Filter Regulator Coalescer with Activated Carbon Filter

- High efficiency filter designed to remove dirt, liquid oil and water from spraying and breathing air.
- Filtration down to 0.01 microns plus activated carbon filter removing contaminants down to 0.003 microns.

Regulator Assemblies

Part No.	Description
FLFR-1	Single outlet Filter Regulator (70cfm)
FLCF-1	Coalescing (fine oil) filter (25cfm)
FLRC-1	Single outlet Filter Regulator Coalescer
FLRCAC-1	Single outlet filter regulator coalescer with activated carbon filter

Part No.	Description
XA-12	Replacement coalescing filter element (FLRC + FLRCAC)
AC-12	Replacement activated carbon filter (FLRCAC)
9450802	Upper Cover (All)
9450301	Metal Bowl (All)
GA-319	Gauge (FLFR+ FLRC+ FLRCAC)
9450102	Replacement filter element (FLFR, FLRC, FLRCAC)



I-SYSTEM PRO AIR CAP, FLUID TIP AND NEEDLE KITS

Gun Model	Kit Part No		
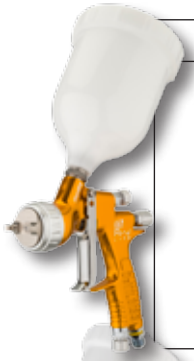 GTi Pro Lite	PROL-455-HV30-12	PROL-455-TE10-12	PROL-455-TE20-12
	PROL-455-HV30-13	PROL-455-TE10-13	PROL-455-TE20-13
	PROL-455-HV30-14	PROL-455-TE10-14	PROL-455-TE20-14
 GTI Pro Gravity	PRO-450-H1-12	PRO-450-T1-12	PRO-450-T2-12
	PRO-450-H1-13	PRO-450-T1-13	PRO-450-T2-13
	PRO-450-H1-14	PRO-450-T1-14	PRO-450-T2-14
 GTI Pro Suction	PRO-451-H1-16	PRO-451-T1-16	PRO-451-T2-16
	PRO-451-H1-18	PRO-451-T1-18	PRO-451-T2-18
	PRO-451-H1-20	PRO-451-T1-20	PRO-451-T2-20
 GTI Pro Pressure	PRO-451-T4-085	PRO-451-T4-10	PRO-451-T4-12
	PRO-451-T4-14		
 PRi Pro Gravity	PRIPRO-450-P1-14	PRIPRO-450-P1-16	PRIPRO-450-P1-18
	PRIPRO-450-P1-20	PRIPRO-450-P1-25	
 SRi Pro	SRIPRO-450-TS1-08	SRIPRO-450-HS1-08	
	SRIPRO-450-TS1-10	SRIPRO-450-HS1-10	
	SRIPRO-450-TS1-12	SRIPRO-450-HS1-12	

GRAVITY AND SUCTION CUP ACCESSORIES



Gravity Feed Cups

Part No	Description
GFC-501	568ml (1 Pint) Acetal gravity cup for GTI / GFG
KGP-509-1	284ml (1/2 Pint) Nylon gravity cup for GFG
SRi-510	125ml Acetal gravity cup
SRi-42-K3	Pack of 3 cone filters
SRi-478-K12	Pack of 12, 125ml gravity cups for SRi
GFC-402	Lid assembly for GFC-501 gravity cup
KGP-401	Lid assembly for KGP-509 gravity cup
GFC-17-K5	Washer
GFC-2-K5	Pack of 5 drip check lids
KGP-5-K5	Pack of 5 gravity cup strainers for GFC-501 & KGP-509
SRi-8-K6	Pack of 6 lids for SRi gravity cups
KR-459-K5	Mini cups
GFC-502	Gravity Cup Aluminium 1l
GFC-404-K2	Disposable Lid Kit (GFC-502)



Suction Feed Cups

Part No	Description
KR-566-1-B	1 litre standard suction cup and lid assembly for JGA
KR-466-K	Cup only – 1 litre suction cup
KR-4001-B	Suction cup lid assembly for JGA cups
KR-115-K5	Pack of 5 drip free diaphragms
KR-11-K3	Pack of 3 Tri-Seal gaskets for KR suction cups
KR-69-K3	Pack of 3 Leather gaskets for suction cups
KR-483-K10	Kit of 10 mesh KR cup strainers – to fit 7/16" tube, 115 Micron
KR-484-K10	Kit of 10 mesh KR cup strainers – to fit 7/16" tube, 350 Micron
KR-110-K3	Kit of 3 Spot Pots



In-Line Air Filters

- Lightweight, gun mounting air filter
- High efficiency action traps water, oil and dirt
- Tough solvent resistant acetal housing with 1/4" threads

Part No: HAF-507-K12

In-Line Air Adjusting Valve

- Fits neatly in-line at the gun air inlet
- Increase or decrease working pressure at the gun
- Calibrated up to 11 Bar (160 psi)

Part No: HAV-501-B





Gun Cleaning Brushes

- Ideal for a variety of gun cleaning jobs
- Tough resilient bristles for useful service
- Suitable size for cleaning most parts of the gun

Part No: 4900-5-1-K3 Pack of 3 brushes

Duster/Blow Guns

- Palm size trigger operated with diffused air flow
- Low noise factor
- Durable design

Part No: DGD-505-E





Viscosity Cups

- The fast, simple way to check out paint viscosity
- Tough durable and easy to clean
- Precision metal drain out insert

Part No: 7000-114-K2 Pack of 2 viscosity cups

Mixing Cups

- Easy to use, disposable mixing cups
- Made from solvent resistant clear polypropylene
- Calibrated with a 0-600 volumetric measurement scale

Part No: MC-1-K50 Pack of 50 cups
Part No: MC-1-K1000 Pack of 1000 cups
Part No: MC-2-K50 Pack of 50 lids
Part No: MC-2-K1000 Pack of 1000 lids





Trigger Clip

- Made from solvent resistant acetal
- Locks trigger in open position for gun wash machine
- Snaps in place for secure fit

Part No: PRO-15-K3

Professional Spray Gun Cleaning Kit

- Handy tool wrap style kit of purpose made cleaning brushes and tools
- Includes cleaning instructions and spray gun oil
- Keeps your spray guns in top working order

Part No: KK-4584





Spray Gun Service Kit

- Spray gun service/repair kit for GTIPRO and SRIPRO

Part Nos: PRO-415-1 – Service kit



DGi PRO Digital Gauge
- The most accurate digital gauge available
- Clear and easy to read, just squeeze the trigger to set
- Smooth, accurate control even when wearing gloves

Part No: DGIPRO-502-BAR

DGi PRO pod
- Perfectly positioned for easy checking
- Accurate digital "bar" read-out of working pressure
- Accurate readings to within 0.05 bar (0.7 psi)

Part No: DGIPRO-503-BAR-K (GTi Pro)
Part No: DGIPRO-504-BAR-K (GTi Pro LITE)





Gravity Gun Stands
- Stable metal workbench gun stands
- Choice of 2 stands for 3 gravity guns or a single gun
- Single gun stand is ideal for SRi guns and full size guns

Part Nos: GGS-1 – 3 gun stand
GFV-50-F – single gun stand

Gravity Cup Filters
- Effectively removes dirt, flakes and scum
- Keeps the finish blemish free
- Resistant to most solvents – easily cleaned

Part No: KGP-5-K5 - Pack of five filters





Suction Cup Filters
- Convenient, easy fit suction cup paint filters
- Keeps spray gun passages clear
- Removes dirt, flakes and scum

Part Nos: KR-484-K10 51 mesh filter screen (general purpose)
KR-483-K10 130 mesh filter screen (finer filtration)

Suction Cup Lid Gaskets
- Ready to use, purpose fit suction cup lid seals
- Choose between Tri-Seal or traditional leather gaskets
- Fits all DeVilbiss KR type suction cups

Part Nos: KR-11-K3 Tri-seal gaskets
KR-69-K3 Leather gaskets





Drip-Free Diaphragms
- Prevents suction cup leaks and vent hole blockages
- Allows the cup to be used at angles
- Fits snugly under the cup lid

Part No: KR-115-K5 (Pack of 5)

Spot Pots
- 0.5 litre capacity nylon cup insert cuts down on costly paint mixes
- Tapered base ensures that minimal quantities of paint can be utilised
- Quickly and easily cleaned for frequent colour changes
- Fits all 1 litre capacity KR type suction cups

Part No: KR-110-K3





Gun Lube
- Pack of 10 gun lube sachets.

Part No: GL-1-K10

HOSE & FITTINGS

- **High Flow Air Hose with Connections.**
- **High air flow, high quality rubber air hose.**
- **8mm (5/16”) bore ideal for use with conventional, compliant / HVLP spray guns, air fed breathing equipment and other air tools.**



Option 1
10 metre length air hose complete with quality chrome replaceable 1/4” swivel nut female fittings either end.
Part No: H-6065-B



Option 2
10 metre length air hose complete with crimped female quick detach connection at one end and crimped male QD fitting at the other end.
Part No: H-6085-QD



Option 3
10 metre length air hose complete with crimped female quick detach connection at one end and crimped female loose nut fitting at the other end.
Part No: H-6086-B

High Flow Air Hose Assemblies

Red rubber air hose assemblies including 1/4” BSP connections



Part No	Description
H-7501HA-1.2	1.2 metre, 5/16”ID Air Hose Assembly – For KBII
H-7501HA-5	5 metre, 5/16”ID Air Hose Assembly
H-7501HA-7.5	7.5 metre - 5/16”ID Air Hose Assembly

Part No	Description
H-7501HA-10	10 metre - 5/16”ID Air Hose Assembly
H-7501HA-15	15 metre - 5/16”ID Air Hose Assembly
H-7502HA-7.5	7.5 metre - 3/8”ID Air Hose Assembly
H-7502HA-10	10 metre - 3/8”ID Air Hose Assembly
H-7502HA-15	15 metre - 3/8” ID Air Hose Assembly

Air Hose Connections
Part No: PA-HC-4527 1/4” BSP Female (8mm (5/16”) hose bore)
Part No: PA-HC-4528 1/4” BSP Female (9.5mm (3/8”) hose bore)

Fluid Hose Assemblies

Black rubber fluid hose assemblies including 3/8” BSP connections



Part No	Description
H-7503HA-1.45	1.45 metre 1/4” ID Fluid Hose Assembly – For KBII
H-7503HA-5	5 metre 1/4” ID Fluid Hose Assembly
H-7503HA-7.5	7.5 metre 1/4” ID Fluid Hose Assembly

Part No	Description
H-7503HA-10	10 metre 1/4” ID Fluid Hose Assembly
H-7503HA-15	15 metre 1/4” ID Fluid Hose Assembly
H-7504HA-10	10 metre 3/8” ID Fluid Hose Assembly
H-7504HA-15	15 metre 3/8” ID Fluid Hose Assembly

Fluid Hose Connections
Part No: PA-HC-4543 3/8” BSP Female (6mm (1/4”) hose bore)
Part No: PA-HC-4548 3/8” BSP Female (9.5mm (3/8”) hose bore)

Quick detach fittings

- **High flow connections – minimal pressure drops**
- **Ideal for spray guns, respirators, hoses and regulators**

MPV-5 – Male quick detach stem with 1/4” female fitting:
MPV-424 – Female quick detach connection with 1/4” male fitting:
MPV-10 – Male quick detach stem with 1/4” male fitting:
MPV-462 – Female quick detach with 1/4” female fitting:
MPV-463 – Economy pack, includes 1 of each shown in the picture to the right:
MPV-60-K3 – Male quick detach Uni Swivel stem with 1/4” female fitting:



KBII 2.3 LITRE REMOTE CUP

- **2.3 litre capacity – greater area coverage, less refills.**
- **Aluminium or stainless steel options (for waterbase materials).**
- **Familiar gun grip handle plus belt hook for operator convenience.**
- **At-the-job controls with lid mounted pressure gauge.**
- **Available complete with short cup to gun air and fluid hoses**
- **KB disposable liners make cleaning and colour changes fast and simple.**



Specification

Air Inlet and outlet connections threads	1/4" BSP (M)
Fluid outlet connection (to spray gun)	3/8" BSP (M)
Maximum working pressure	2.1 Bar (30 psi)
Maximum air supply pressure	8.6 bar (125 psi)
Height	183 mm
Weight (less hoses)	1.76 kg
Cup Capacity	2.3 litres

Spray Gun Kits for use with KBII

Part No	Description
GTIPPRO-**-***	Pressure Feed Gun with either H1, T1, T2, T3 or T4 air cap and either 085, 10, 12, 14, 16, 18 or 20 fluid tip
PROPL -**-***	GTi Pro LITE Pressure Feed Gun with either TE10, TE20, TE30 or TE40 air cap and either 085, 10, 12 or 14 fluid tip
JGAPPRO-**-***	Pressure Feed Gun with either C1, C2 or C3 air cap and either 085 12, 14, 16 or 18 fluid tip

Kit contents are spray gun, (suction cup with filter if appropriate), Torx key, brush and multi-fit spanner
** = Air Cap / *** = Fluid Tip

KBII Remote Cup kits

Part No	Description
KB-522	Aluminium Remote Cup without hoses
KB-522-SS	Stainless Steel Remote Cup without hoses
KB-622	Aluminium Remote Cup complete with air and fluid hoses



KK-5051

Accessories

Part No	Description
KB-422	Aluminium 2.3 Litre KBII Spare Cup Only for KB-522
KB-442	Stainless Steel 2.3 Litre KBII Spare Cup Only for KB-522-SS
KK-5051	Kit of 20 disposable liners plus lid diaphragms
H-7501HA-1.2	1.2m Air Hose Assembly with BSP Fittings
H-7503HA-1.45	1.45m Fluid Hose Assembly with BSP Fittings
GA-355	Air Pressure Gauge for KBII - 0-30psi



KB-422

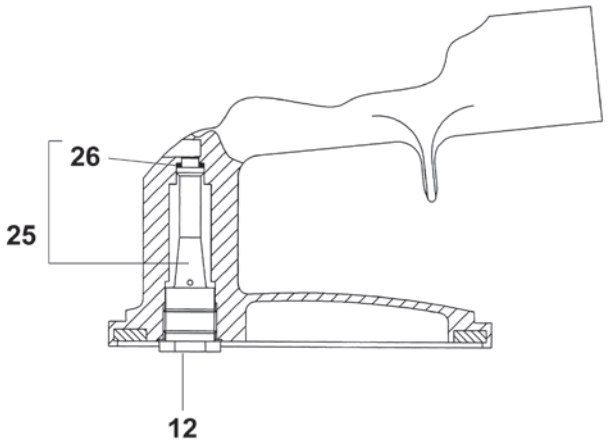

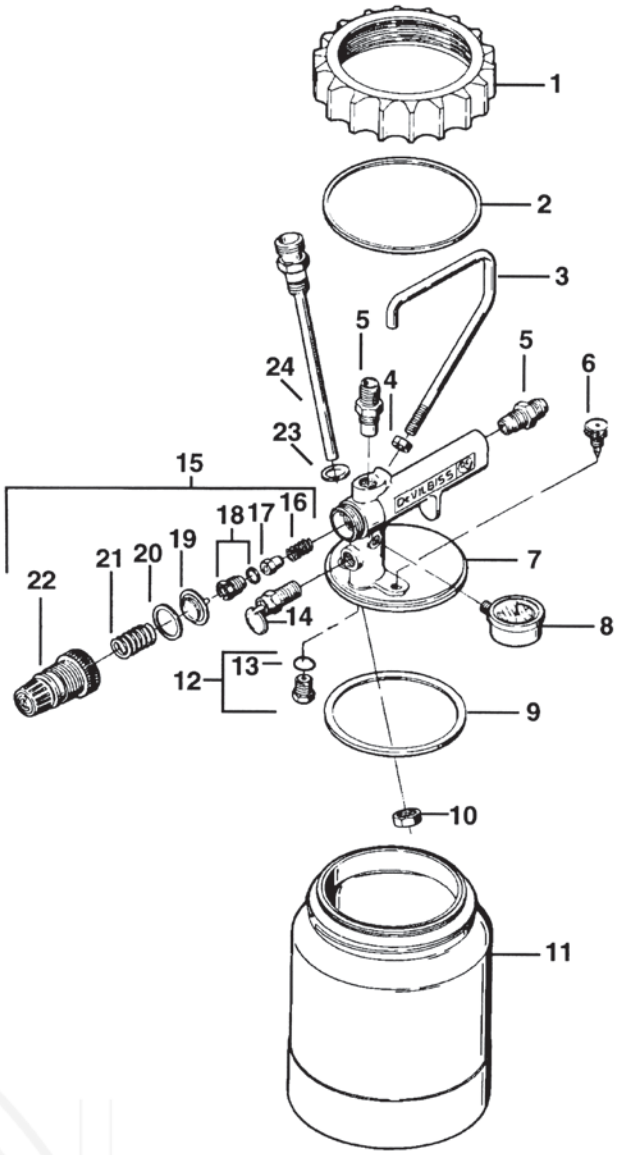

Ref No	Description	Part Number
1	Retaining Ring	KB-64
2	Slip Rings	KB-81-K5
3	Handle	KB-74
4	CD Nut	-
5	Connector 1/4" BSP	JGA-158
6	Pressure Relief Valve	KB-66
7	Lid	Not available
8	Gauge	GA-355
9	Seal	KB-80-K5
10	Locknut (KB-522) kit of 5	MBD-11-K5
11	Cup – Aluminium (KB-522)	KB-422
	Cup – Stainless Steel (KB-522-SS)	KB-442
12	Check Valve kit of 3	KB-432-K3
13	Seal kit of 5	KB-85-K5
14	Safety Valve	TIA-4355

Ref No	Description	Part Number
15	Regulator Assembly	KB-428-1
16	Spring	-
17	Valve	-
18	Valve Seat and Seal	-
19	Diaphragm	-
20	Slip Ring	-
21	Spring	-
22	Bonnet	-
23	Seal kit of 6	KB-60-K6
24	Tube Assembly 3/8" BSP (KB-522-B)	KK-4997
	Tube Assembly 3/8" BSP STS (KB-522-SS)	KK-4996
25	Check Valve and Seal Assembly	KB-444
26	Seal kit of 5	KB-101-K5
Hose & Fittings		
	1.2m Air Hose Assembly with BSP Fittings	H-7501HA-1.2
	1.45m Fluid Hose Assembly with BSP Fittings	H-7503HA-1.45

BINKS DX SERIES: AIR OPERATED 1:1 RATIO DIAPHRAGM PUMPS

- **Acetal pump body with stainless steel balls and soft seats for universal paint compatibility.**
- **The unique diaphragm design and "built in" fluid regulator provide consistent pressure and readily adjustable paint flow.**
- **The Non-stall air valve provides smooth, quiet and surge free paint delivery up to 1000 cc/minute.**
- **Clearly labelled Air regulators provide independent control of pump and spray gun fluid and air pressures.**
- **Quick release air, fluid inlet and outlet connections for faster maintenance.**
- **Re-circulation/dump valve accessory for faster colour changes reducing down time, saving time and money.**
- **Pump outfit mountings include Cart, Wall and Tripod outfits with or without spray guns & hoses.**



Specification

Pump Ratio	1 to 1
Max. Air Pressure	7 Bar / 100 PSI
Max. Fluid Pressure	7 Bar / 100 PSI
Nominal Flow Volume / Cycle	0.07 Litres (0.018 US Gall)
Fluid Output @ 60 cycles/min	4.2 Litres / min (1.1 US Gall / min)
Max Recommended Continuous Cycle Rate	10 Cycles /min
Max Recommended Intermittent Cycle Rate	30 Cycles /min
Inlet Fluid Connection	3/8" Universal (BSPP/NPSM) Male or Female
Outlet Fluid Connection	3/8" Universal (BSPP/NPSM) Male or Female
Maximum Dry/Wet Lift	6.6m (21.8 feet)
Air Inlet	G1/4" (BSPP) Female
Fluid Regulator Pilot	Ø4 Tube
Air Volume / cycle @ 6.9Bar/100psi	0.77L (0.027SCFM)
Air Flow @ 10 cycles/min 6.9 bar/100psi	7.7L/min (0.27SCFM/min)
Air Flow @ 30 cycles/min 6.9 bar/100psi	23.2L/min (0.82SCFM/min)
Air Quality ISO 8573.1 Class 3.3.2 #	Dirt 5 microns
	Water -20°C @ 7bar (940ppm)
	Oil 0.1mg/m3
	Non Lubricated
Noise Level	68db LAeq
Earth (Air Inlet Cover)	<1Ω
Weight – Bare Pump	2.2 Kg (4.9 lbs)





Spray Gun Kits for use with the DX Pump:

Part No	Description
PROPL -**-***	PROPL -**-*** GTi Pro LITE Pressure Feed Gun with either TE10, TE20, TE30 or TE40 air cap and either 085, 10, 12 or 14 fluid tip

DX Pump Outfits:

Part No	Description
DX70R3-CF2	Cart mounted pump outfit with filter and three air controls
DX70R3-TF2	Tripod mounted pump outfit with paint filter and three air controls
DX70R3-WF2	Wall mounted pump with paint filter and three air controls

Ref. No	Description	Part No.
1	Check valve seal kit x4	DXK-1
2	Check valve kit x4	DXK-2
3	Diaphragm kit x2	DXK-3
4	Shaft & seal kit	DXK-4
5	End cap seal kit x2	DXK-5
6	Caps & screws x2	DXK-6
7	End cap nut x10	DXK-7
8	End Cap	DXK-8

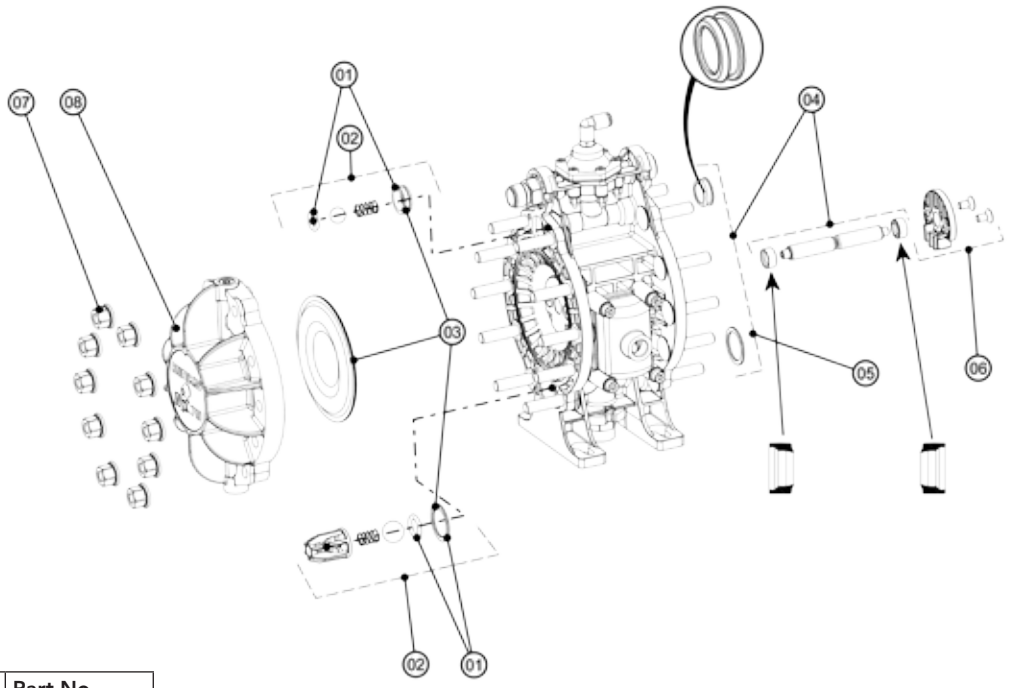

Ref. No	Description	Part No.
9	Inlet, outlet & plug connector seal kit	DXK-9
10	Male inlet connector kit	DXK-10
11	Female inlet connector kit	DXK-11
12	Male outlet connector kit	DXK-12
13	Female outlet connector kit	DXK-13
14	Air valve kit	DXK-14
15	Fluid regulator kit	DXK-15
16	Regulator cap & screws	DXK-16
17	Inlet (x2) & outlet (x2) clips	DXK-17
18	Cover, seal & screws	DXK-18
19	Female inlet / outlet thread seal x4	DXK-19
20	O-ring x5	DXK-20
21	O-ring x5	DXK-21
22	O-ring x5	DXK-22
23	O-ring x5	DXK-23
24	O-ring x5	DXK-24
25	Gasket x4	DXK-25
26	Blanking plate & screws ‡	DXK-26
27	Blanking gasket x 4 ‡	DXK-27
28	Insert ‡	DXK-28
29	Grounding cable 4m	0114-011798

‡ = parts for non-fluid regulator model

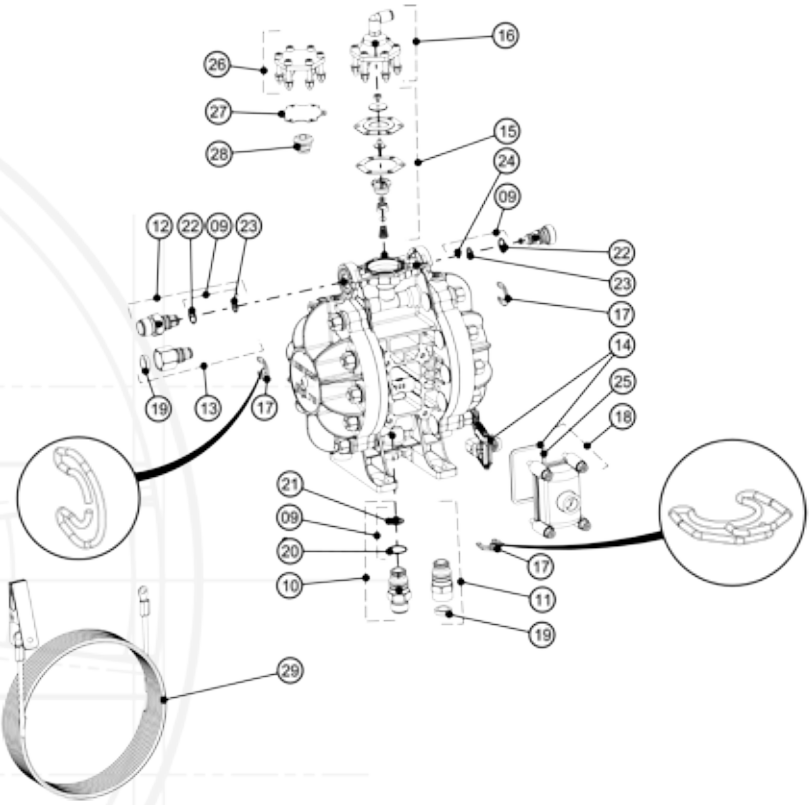

32:1 HIGH PRESSURE PUMP WITH BINKS AA4400M AIR ASSISTED AIRLESS

- Patented air valve technology. Enables pump to change over quickly to significantly reduce pulsation.
- Long lasting ceramic coated piston rods. Superior wear resistance lasting up to three times longer than hard chrome pistons.
- Designed to pump long with less downtime and extended packing life. Self-adjusting sprint loaded fixed packings last up to three times longer than the competition. Large sight glass for visual packing inspection.
- Air Assisted Airless HVLP & A75 guns provide the latest atomisation technology.
- Stainless Steel system – pump and gun.





- Unique Trans-Tech or HVLP air caps provide a 'softer fine spray' for superior finish quality and higher transfer efficiency than competitors.
- Lightweight and Operator friendly design with lighter trigger pull tension.
- Easy to remove 'in-line' needle assembly for quick maintenance.
- Adjustable needle packing and 'balanced' air valve design.
- Gun handles Solvent and Waterborne coatings as standard.
- Standard flat tips, fine finish tip and twist tip cleaner available with a wide range of tips from 0.18mm to 0.89mm.

Part No.	Description
MXL432PU-C-F-ACG	Cart Mounted (Part No includes A4400M Gun)
MXL432PU-C-T-ACG	Tripod Mounted (Part No includes A4400M Gun)

Gun Specification

Air/Fluid inlet thread	¼" Universal (M)
Fluid passageways	Stainless Steel
Gun Weight	490g
Gun Body	Forged Aluminium
Max working fluid pressure	303 bar (4400 psi)
Max air inlet pressure	6.9 bar (100 psi)
Seat	Tungsten Carbide
Stainless steel inline paint filter	100 mesh

Pump Specification

Ratio	32:1
Max Inlet Pressure	8.0 bar (116 psi)
Flow Rate Nominal	1.4 l/min
Flow Rate Max	4.0 l/min
Volume/Cycle	24cm^3
Max Operating Pressure	256 bar (3600 psi)
Cylinder Diameter	85 mm
Piston Stroke	75 mm
Air Consumption @ 20 cycles/min	147 l/min

Accessories

Part No	Description
0110-009132	Filter insert for high pressure filter - 100 mesh
0110-009133	Filter insert for high pressure filter - 150 mesh
0110-009134	Filter insert for high pressure filter - 200 mesh
54-5788-K5	AAA 4400 spray gun filter kit of 5 - 60 mesh
54-5789-K5	AAA 4400 spray gun filter kit of 5 - 100 mesh

FOR A DETAILED BREAKDOWN OF THE MXL PUMPS PLEASE CONSULT YOUR SERVICE BULLETIN OR CONTACT THE DEVILBISS CUSTOMER SERVICE DEPARTMENT.

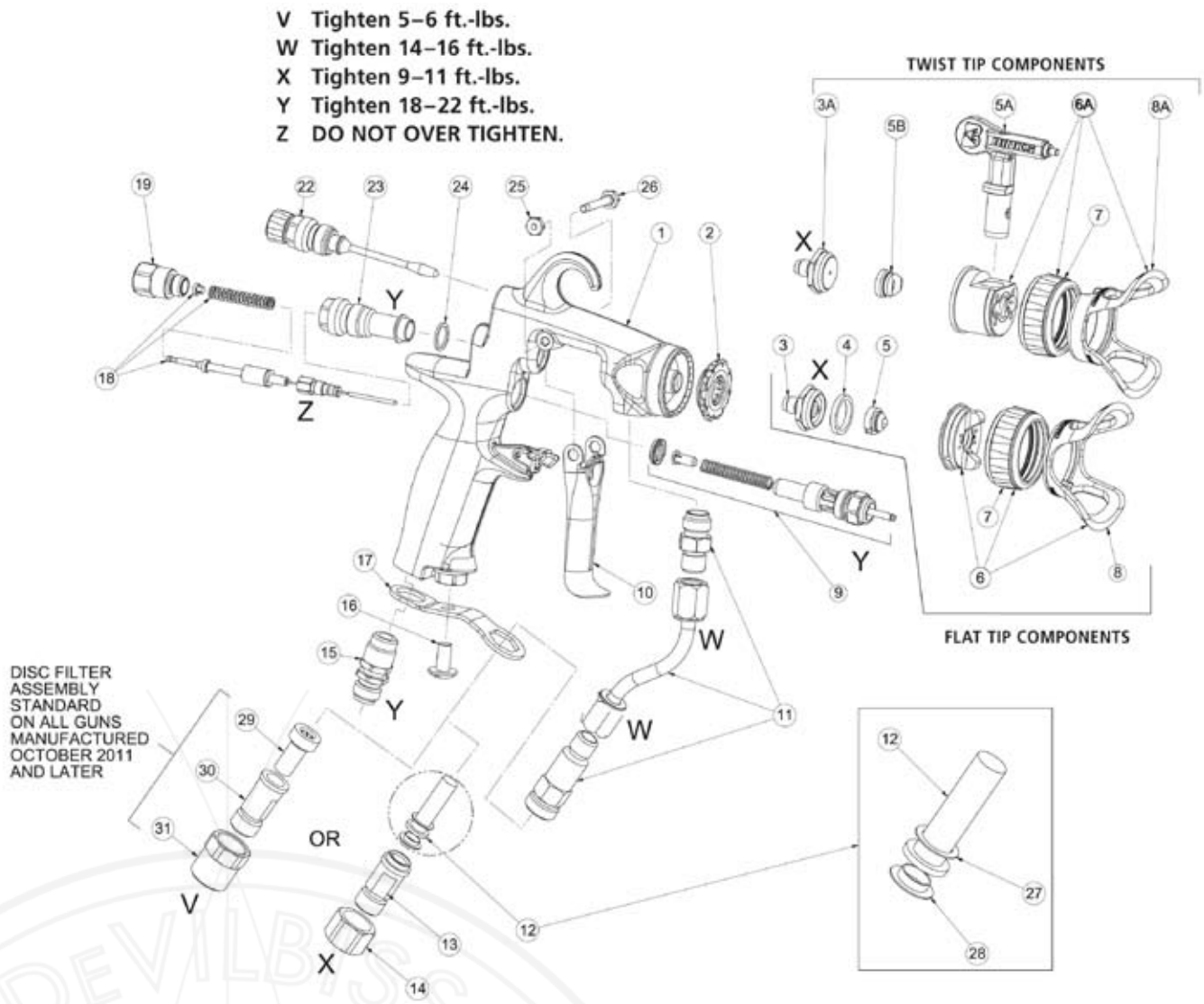

Ref No	Description	Part Number
1	Gun Body	-
2	Baffle Plate (Kit of 10)	SPA-71-K10
3	Fluid Seat (4400 psi) (Tungsten Carbide)	54-5799-K
3A	Twist Tip Fluid Seat (4400 psi) (Tungsten Carbide)	54-5832-K
4	Gasket (Kit of 10)	SPA-98-K10
5	Flat Tip (Fine Finish Tips 9-XXXX-F)	114-XXXXX
5A	Twist Tip	9-XXX-75
5B	Twist Tip Brace (Kit of 2)	54-7539-K2
6	Flat Tip HVLP Air Cap (Flat Tip Trans-Tech Air Cap 54-5797-K)	54-5890-K
6A	Twist Tip HVLP Air Cap (Flat Tip Trans-Tech Air Cap 54-5798-K)	54-5924-K
7	Retaining Ring	54-5852
8	Flat Tip Guard	54-5794
8A	Twist Tip Guard	54-5921
9	Air Valve Assembly	SN-402-K
10	Trigger	-
11	Fluid Tube Assembly	54-5780

Ref No	Description	Part Number
12	Fluid Filter 60 Mesh (Kit of 5) (100 Mesh Filter (Kit of 5) 54-5789-K5)	54-5788-K5
13	Fluid Inlet Swivel (1/4" NPS)	-
14	Filter Adapter Nut	-
15	Air Inlet Fitting 1/4" NPS (Kit of 3)	SN-9-K3
16	Filter Bracket Screw	-
17	Filter Bracket	-
18	Fluid Needle Assembly (4400 psi)	-
19	Blanking Needle Nut	54-5850
20	Needle Spring Pad	-
21	Needle Spring (4400 psi)	-
22	Spreader Valve Assembly	54-5815
23	Body Bushing	-
24	Body Bushing Gasket	-
25	Trigger Nut	-
26	Trigger Screw	-
27	Top Filter Seal	-
28	Bottom Filter Seal	-

BINKS PRESSURE FEED TANK

- Zinc plated tank shell for long service life.
- Single regulator and gauge to control tank and air pressure.
- Zinc plated lid assemblies for solvent based coatings.
- Positive four point lid clamping for secure operation.
- High density polyethylene, tank liners ensure efficient use.



Specification

Tank Capacity	9.5 litre
Maximum working Pressure	5.5 bar (80psi)
Safety Valve Set Pressure	5.5 bar (80psi)
Air Inlet Size	1/4" BSP (M)
Fluid Outlet Size	3/8" BSP (M)
Tank Shell	SA-620 H.R Steel Zinc plate 2.7mm (8 gauge)
Tank Lid	SA-414 H.R Steel Zinc plate 4.2mm (3/16")
Fluid Tube	Steel, Galvanised Zinc Plate
Air Manifold	CRS Zinc Plated
Fluid Outlet	Steel, Galvanised Zinc Plate
Lid Gasket	Santoprene™

Spray Gun Kits for use with KBII

Part No	Description
GTIPPRO-**-***	Pressure Feed Gun with either H1, T1, T2, T3 or T4 air cap and either 085, 10, 12, 14, 16, 18 or 20 fluid tip
PROPL -**-***	GTi Pro LITE Pressure Feed Gun with either TE10, TE20, TE30 or TE40 air cap and either 085, 10, 12 or 14 fluid tip
JGAPPRO-**-***	Pressure Feed Gun with either C1, C2 or C3 air cap and 085 12, 14, 16 or 18 fluid tip

Kit contents are spray gun, (suction cup with filter if appropriate), Torx key, brush and multi-fit spanner
** = Air Cap / *** = Fluid Tip

Pressure Feed Tank

Part No	Description
83C-210-B	9.5 litre capacity zinc plated tank and lid assembly
PT-78-K10	Kit of 10 polyethylene inner liners for 9.5 litre capacity tank
VS-521	Paint filter (100 mesh) and housing – fits directly onto fluid outlet of tank - NPSM
VS-522	Paint filter (100 mesh) and housing – fits directly onto fluid outlet of tank - BSP
H-7501 PA-HC-4527	8mm (5/16") bore red rubber air hose 1/4" BSP Female (8mm (5/16") hose bore)
H-7502 PA-HC-4528	9.5mm (3/8") bore red rubber air hose 1/4" BSP Female (9.5mm (3/8") hose bore)
H-7503 PA-HC-4543	6mm (1/4") bore black rubber fluid hose 3/8" BSP Female (6mm (1/4") hose bore)
H-7504 PA-HC-4548	9.5mm (3/8") bore black rubber fluid hose 3/8" BSP Female (9.5mm (3/8") hose bore)



PT-78-K10



Hose by the metre
H-7501 &
PA-HC-4527



Hose by the metre
H-7503 &
PA-HC-4543

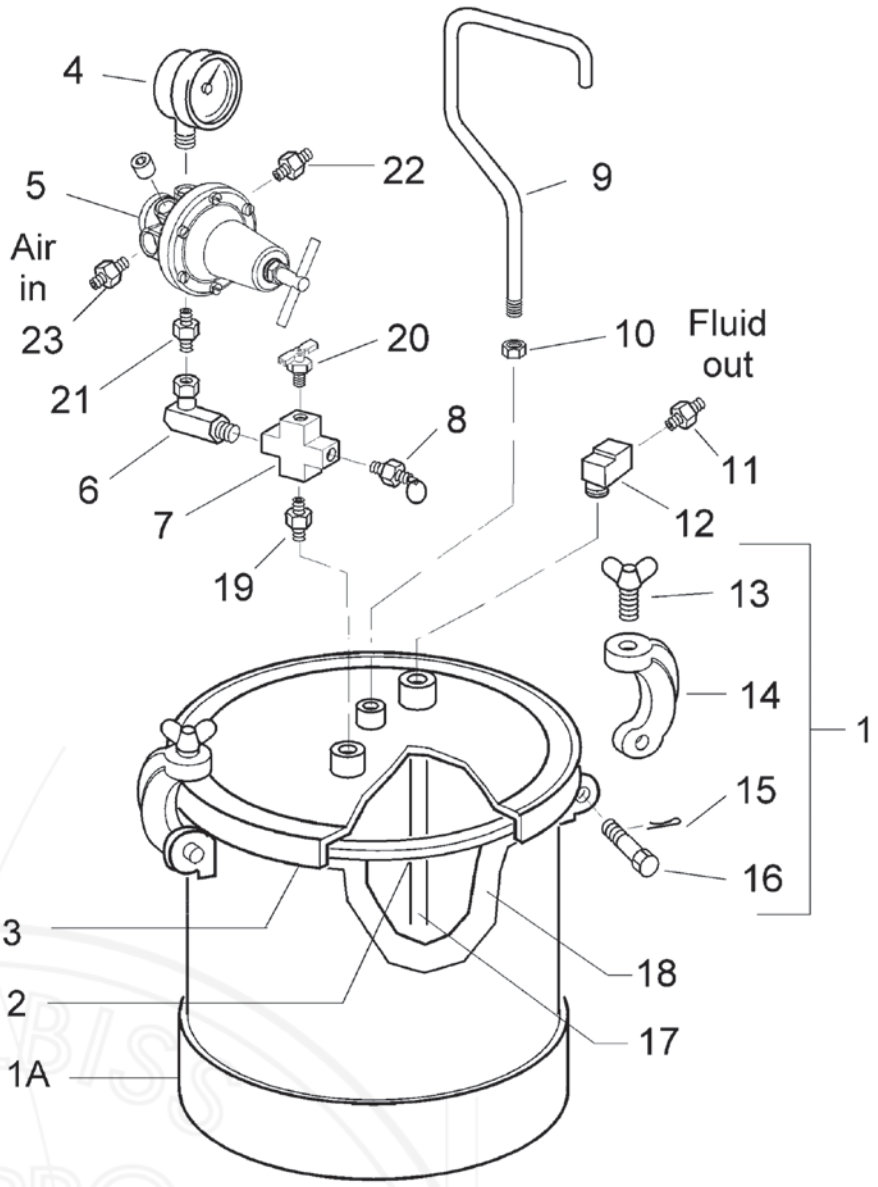

Ref No	Description	Part Number
1	Tank Assembly Kit (Includes Ref Nos. 1A, 13, 14, 15 & 16)	-
1A	Tank Shell	-
2	Lid Gasket, Santoprene	PT-33-1
3	Lid, Zinc Plated	-
4	Gauge	83-2727
5	Regulator	HAR-511
6	90° Swivel Adaptor 1/4' NPS (F) x 1/4' NPT (M)	SSP-30-ZN
7	Cross 1/4' NPT (F)	-
8	Safety Valve - 80 psi	TIA-5080-CE
9	Handle	PT-32
10	Hex Nut 3/8' – 16	-
11	Nipple 3/8' NPT (M) x 3/8' NPT (M)	AD-11
	Nipple 3/8' NPT (M) x 3/8' BSP (M)	2101007
12	Street Elbow 3/8' NPT (F) x 3/8' (M) S.S	SSP-1939

Ref No	Description	Part Number
13	Thumb Screw	-
14	Yoke Assembly	-
15	Cotter Pin, 3/32 x 1"	-
16	Hinge Pin	-
17	Fluid Tube	PT-31
18	Tank Liner (Kit of 10)	PT-78-K10
	Tank Liner (Kit of 60)	PT-78-K60
19	Hex Nipple 1/4' NPT (M)	SSP-462-ZN
20	Air Relief Valve	SS-2707
21	D.M Nipple	83-4233
22	(NPS) Nipple 1/4 ' NPT (M) x 1/4' NPS (M)	H-2008
	(BSP) Nipple 1/4 ' NPT (M) x 1/4' BSP (M)	2101004
23	(NPS) Nipple 3/8' NPT (M) x 1/4' NPS (M)	83-4233
	(BSP) Nipple 3/8' NPT (M) x 1/4' BSP (M)	2101005

DVFR-1 FILTER REGULATOR

Specification

Air Inlet Thread	1/2" BSP (F)
Regulated Outlets	3 Valved
Unregulated Outlets	N/A
Air Outlets (Ball Valves)	1/ 4" BSP (M)
Width (Overall)	175mm (6.9")
Height (Overall)	280mm (11")
Weight	2500 gms (88oz)
Capacity (maximum air flow)	3500 l/min (124cfm)
Maximum Air Inlet Pressure	13 bar (189 psi)
Maximum Regulated Outlet Pressure	0-8 bar (0-116psi)
Pressure Gauge	0-11 bar (0-160 psi)
Gauge port	1/8" BSP (F)
Air Filtration	Down to 5 microns
Drain Valve	Semi-Automatic
Maximum Pressure Drop	5% of Inlet Pressure

Part No	Description
DVFR-1	3 Outlet Filter Regulator (90 cfm)
DV-9420601	Filter bowl removal tool

Ref No	Description	Part Number
1	Upper Cover Assembly	DV-9450806
2	Filter (Air)	DV-9451705
3	Metal Filter Bowl	DV-9453301-MET
4	Ball Valve	SER-3414-MF
5	Pressure Gauge	GA-319
6	Isolation Valve	DV-8000035

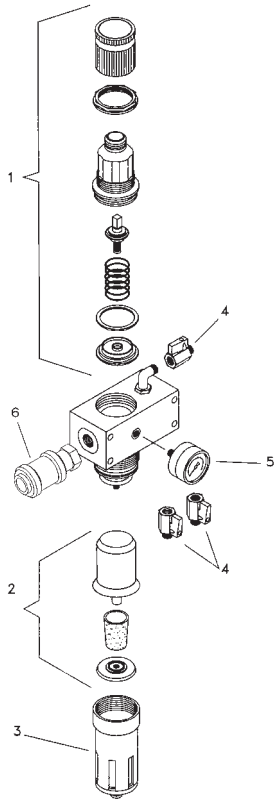

DVFR-2 FILTER REGULATOR COALESCER

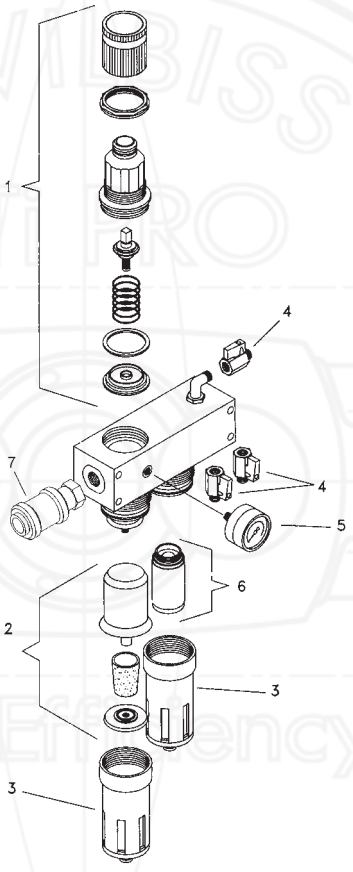

Specification

Air Inlet Thread	1/2" BSP (F)
Regulated Outlets	3 Valved
Unregulated Outlets	N/A
Air Outlets (Ball Valves)	1/ 4" BSP (M)
Width (Overall)	240mm (9.5")
Height (Overall)	280mm (11")
Weight	3200 gms (113oz)
Capacity (maximum air flow)	3500 l/min (124cfm)
Maximum Air Inlet Pressure	13 bar (189 psi)
Maximum Regulated Outlet Pressure	0-8 bar (0-116psi)
Pressure Gauge	0-11 bar (0-160 psi)
Gauge port	1/8" BSP (F)
Air Filtration	Down to 0.01 microns *
Drain Valve	Semi-Automatic
Maximum Pressure Drop	10% of Inlet Pressure

* Suitable for Breathing Air

Part No	Description
DVFR-2	3 Outlet Filter Regulator Coalescer (50 cfm)
DV-9420601	Filter bowl removal tool

Ref No	Description	Part Number
1	Upper Cover Assembly	DV-9450806
2	Filter (Air)	DV-9451705
3	Metal Filter Bowl	DV-9453301-MET
4	Ball Valve	SER-3414-MF
5	Pressure Gauge	GA-319
6	Fine Filter (Oil)	DV-9451711
7	Isolation Valve	DV-8000035

DVFR-3 FILTER REGULATOR

Specification

Air Inlet Thread	1/2" BSP (F)
Regulated Outlets	2 Valved
Unregulated Outlets	N/A
Air Outlets (Ball Valves)	1/ 4" BSP (M)
Width (Overall)	165mm (6.5")
Height (Overall)	240mm (9.5")
Weight	1341 gms (46oz)
Capacity (maximum air flow)	1700 l/min (60cfm)
Maximum Air Inlet Pressure	13 bar (189 psi)
Maximum Regulated Outlet Pressure	0-8 bar (0-116psi)
Maximum Operating Temperature	40°C (104°F)
Pressure Gauge	0-11 bar (0-160 psi)
Gauge port	1/8" BSP (F)
Air Filtration	Down to 20 microns
Drain Valve	Semi-Automatic
Maximum Pressure Drop	5% of Inlet Pressure

Part No	Description
DVFR-3	2 Outlet Filter Regulator (60 cfm)

Ref No	Description	Part Number
1	Upper Cover Assembly	DV-9350811
2	Filter	9351706
3	Metal Filter Bowl	DV-9353301
4	Ball Valve	SER-3414-MF
5	Pressure Gauge	GA-319

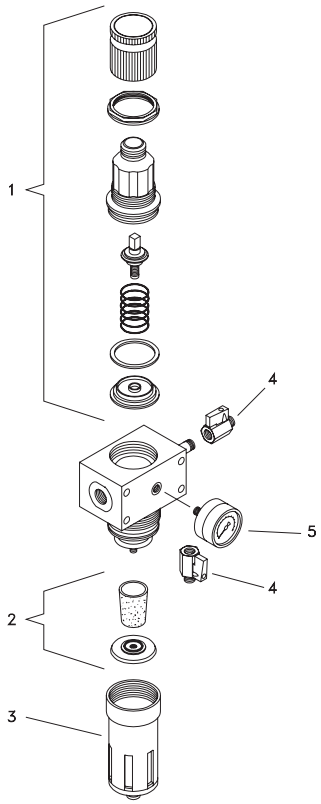

DVFR-8 FILTER REGULATOR COALESCER WITH ACTIVATED CARBON FILTER

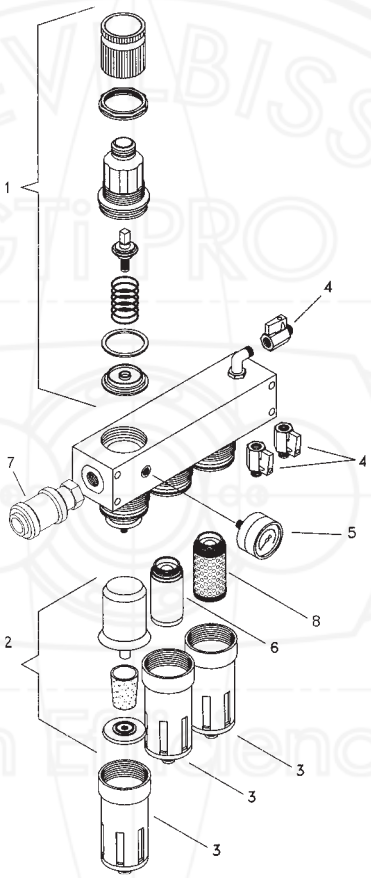

Specification

Air Inlet Thread	1/2" BSP (F)
Regulated Outlets	3 Valved
Unregulated Outlets	N/A
Air Outlets (Ball Valves)	1/ 4" BSP (M)
Width (Overall)	305mm (12")
Height (Overall)	280mm (11")
Weight	3.3kg
Capacity (maximum air flow)	3500 l/min (124cfm)
Maximum Air Inlet Pressure	13 bar (189 psi)
Maximum Regulated Outlet Pressure	0-8 bar (0-116psi)
Pressure Gauge	0-11 bar (0-160 psi)
Gauge port	1/8" BSP (F)
Air Filtration	Down to 0.01 microns *
Drain Valve	Semi-Automatic
Maximum Pressure Drop	10% of Inlet Pressure

* Suitable for Breathing Air

Part No	Description
DVFR-8	3 Outlet Filter Regulator Coalescer with activated carbon filter
DV-9420601	Filter bowl removal tool

Ref No	Description	Part Number
1	Upper Cover Assembly	DV-9450806
2	Filter (Air)	DV-9451705
3	Metal Filter Bowl	DV-9453301-MET
4	Ball Valve	SER-3414-MF
5	Pressure Gauge	GA-319
6	Fine Filter (Oil)	DV-9451711
7	Isolation Valve	DV-8000035
8	Activated Carbon Filter	DV-9451711-AC

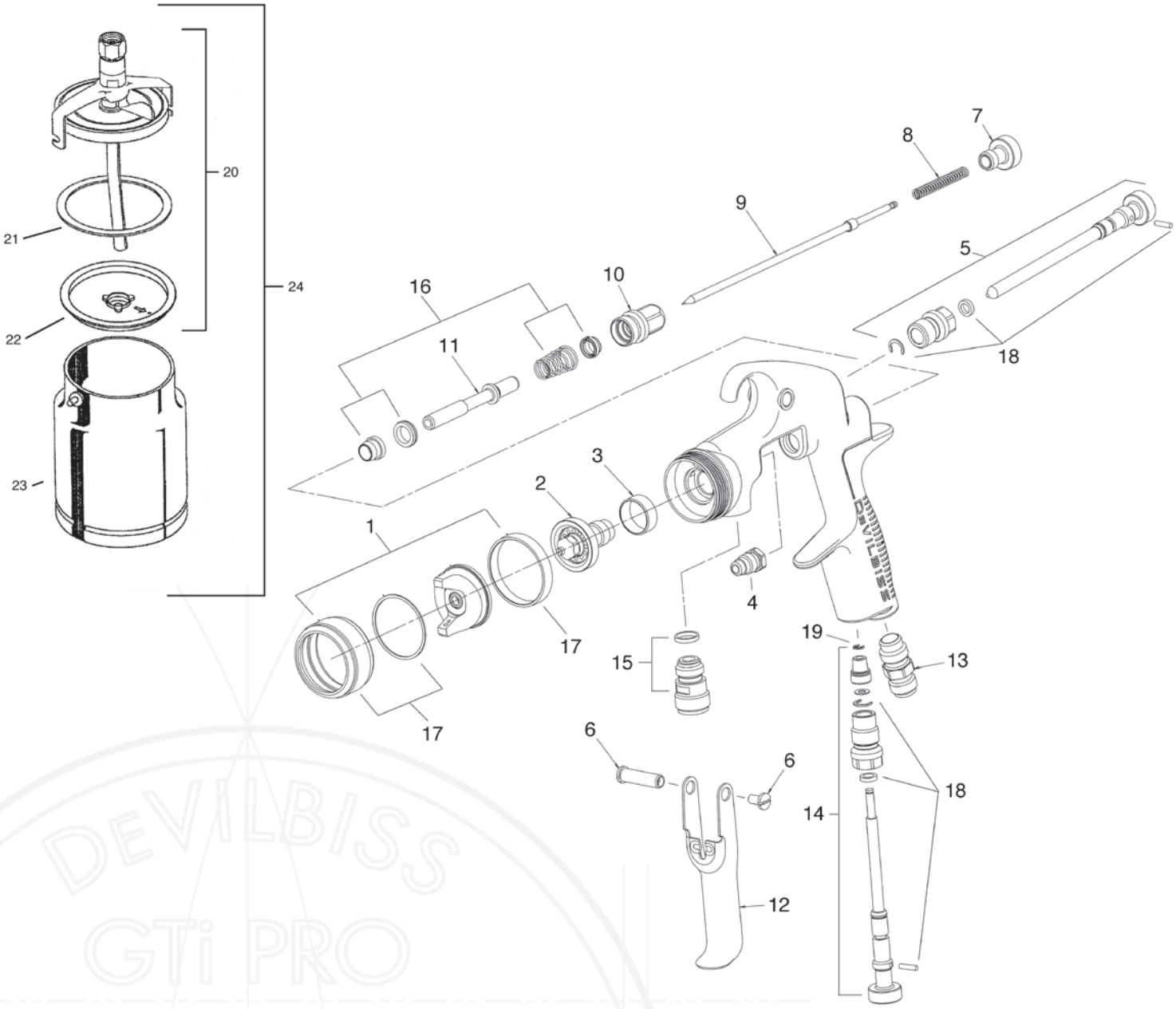

Ref No	Description	Part No.
1	Air Cap/Retaining ring	SP-100-510-K
2	Tip (** = 1.0, 1.4, 1.6, 1.8, 2.0, 2.2mm)	SP-200S-**-K
3	Separator	SP-623-K5
4	Packing	GTI-445-K2
5	Spreader Valve	SP-401-K
6	Stud and Screw	GTI-408-K5
7	Needle Adjusting Screw	SP-614-K
8	Spring	SP-622-K5
9	Needle (** = 1.0, 1.4, 1.6, 1.8, 2.0, 2.2mm)	SP-300S-**-K
10	Airvalve housing + seal	SP-612-K
11	Spindle	-
12	Trigger	SP-617-K

Ref No	Description	Part No.
13	Connector	SP-611-K
14	Airflow Valve	SP-402-K
15	Fluid Inlet Connector and seal	SP-610–K
16	Air Valve Service Kit	SPK-101-K
17	Retaining Ring and Seals	SPK-102-K
18	Spreader/ Cheater Service Kit	GTI-428-K5
19	Circlip	25746-007-K5
20	Cup Lid Assembly	KR-4001-B
21	Lid Gasket - Kit of 3	KR-11-K3
22	Drip Free Diaphragm - Kit of 5	KR-115-K5
23	Cup	KR-466-K
24	Complete Cup	KR-566-1-B

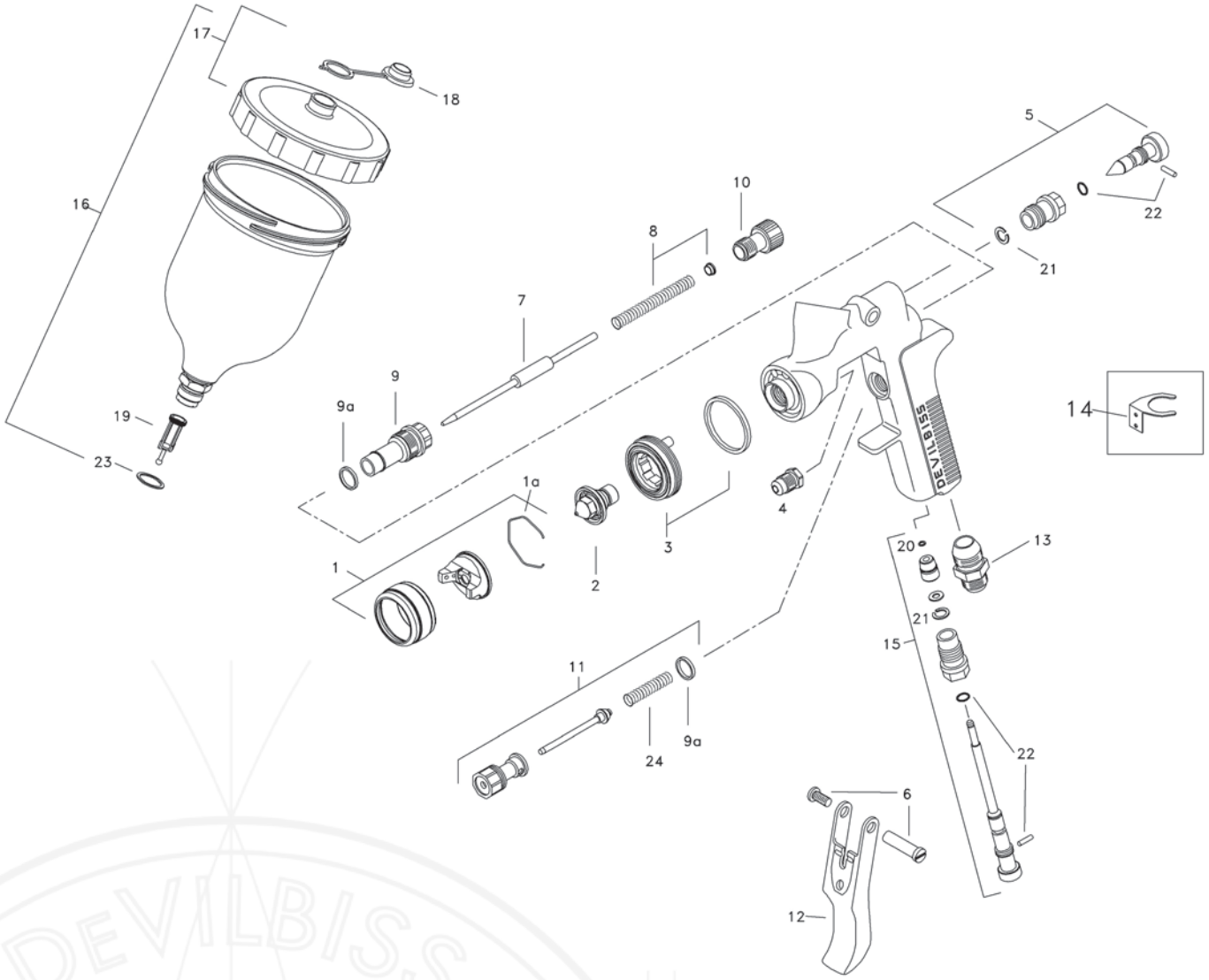

Ref No	Description	Part Number
1	GTi-W Air Cap / Retaining ring	GTi-407-115
	GTi-G Air Cap / Retaining ring	GTi-407-110
	PRi Air Cap / Retaining ring	PRi-407-310
1a	Spring Clip	JGA-156-K5
2	GTi-W Tip (1.3, 1.4 & 1.5mm)	GTi-213-**-K
	GTi-G Tip (1.2, 1.3, 1.4 & 1.5mm)	GTi-213-**-K
	PRi Tip (1.6, 1.8, 2.0, 2.2 & 2.5mm)	PRi-2-**-K
3	Baffle & Seal	GTi-425-K
	Baffle Seal – Kit of 5	GTi-33-K5
4	Packing	GTi-445-K2
5	Spreader Valve	GTi-404-K
6	Stud and Screw	GTi-408-K5
7	GTi Needle	GTi-413-K
	PRi Needle	PRi-3-K
8	Spring and Pad	GTi-409-K5
9	Bushing	GTi-402-K
9a	Seal kit of 5	JGS-72-K5

Ref No	Description	Part Number
10	Needle Adjusting Screw	GTi-414-K
11	Valve Assembly	JGK-449-K
12	Trigger	GTI-108
13	Connector	JGA-158
14	Gun Hook	GFG-6
15	Airflow Valve	GTi-415-K
16	1/2 Ltr Gravity Cup Kit	GFC-501
17	Cup Lid	GFC-402
18	Drip Check Lid kit of 5	GFC-2-K5
19	Filter	KGP-5-K5
20	Circlip	25746-007-K5
21	Circlip	SST-8434-K5
22	Seal & Pin Kit (+SST8434-K5)	GTi-428-K5
23	Washer	GFC-17-K5
24	Spring	JGV-262-K5
	Service Kit for GTI gravity and suction - 12,13,14,15,16,18,20,22 tip	GTI-416-**
	Service Kit for PRi - 16,18,20,22,25 tip	PRi-416-**

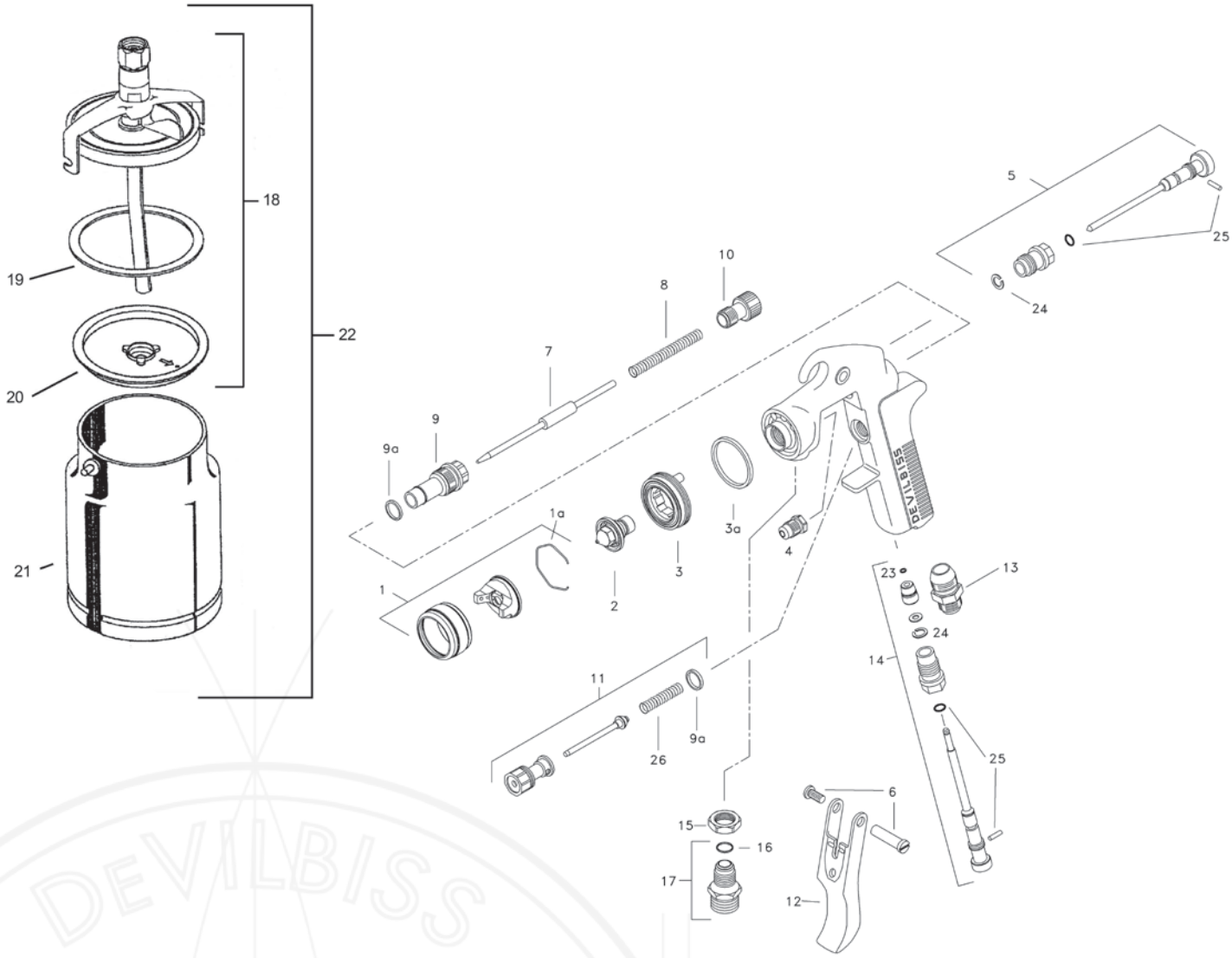

Ref. No	Description	Part Number
1	GTI-P air cap/retaining ring	GTI-407-123
	GTI-S air cap/retaining ring	GTI-407-110
1a	Spring Clip	JGA-156-K5
2	GTI-P Tip	GTi-213-**-K
	GTI-S Tip	GTI-214-**-K
3	Baffle & Seal	GTI-425-K
3a	Baffle seal—Kit of 5	GTI-33-K5
4	Packing	GTi-445-K2
5	Spreader Valve	GTI-405-K
6	Stud and Screw	GTI-408-K5
7	GTI-P needle	GTi-449-**-K
	GTi-S needle (for GTI-214 Tip)	GTI-420-K
8	Spring and Pad	GTI-409-K5
9	Bushing	GTI-402-K
9a	Seal kit of 5	JGS-72-K5
10	Needle Adjusting Screw	GTI-414-K

Ref. No	Description	Part Number
11	Valve Assembly	JGK-449-K
12	Trigger	GTI-108
13	Connector	JGA-158
14	Airflow Valve	GTI-415-K
15	Lock Nut	JGA-51-K5
16	Seal	23165-001
17	Fluid Inlet Connector and seal	JGA-159-K
18	Cup lid assembly	KR-4001-B
19	Lid Gasket - kit of 3	KR-11-K3
20	Drip free diaphragm - kit of 5	KR115-K5
21	Cup	KR-466-K
22	Complete cup	KR-566-1-B
23	Circlip	25746-007-K5
24	Circlip	SST-8434-K5
25	Seal & Pin Kit	GTI-428-K5
26	Spring	JGV-262-K5

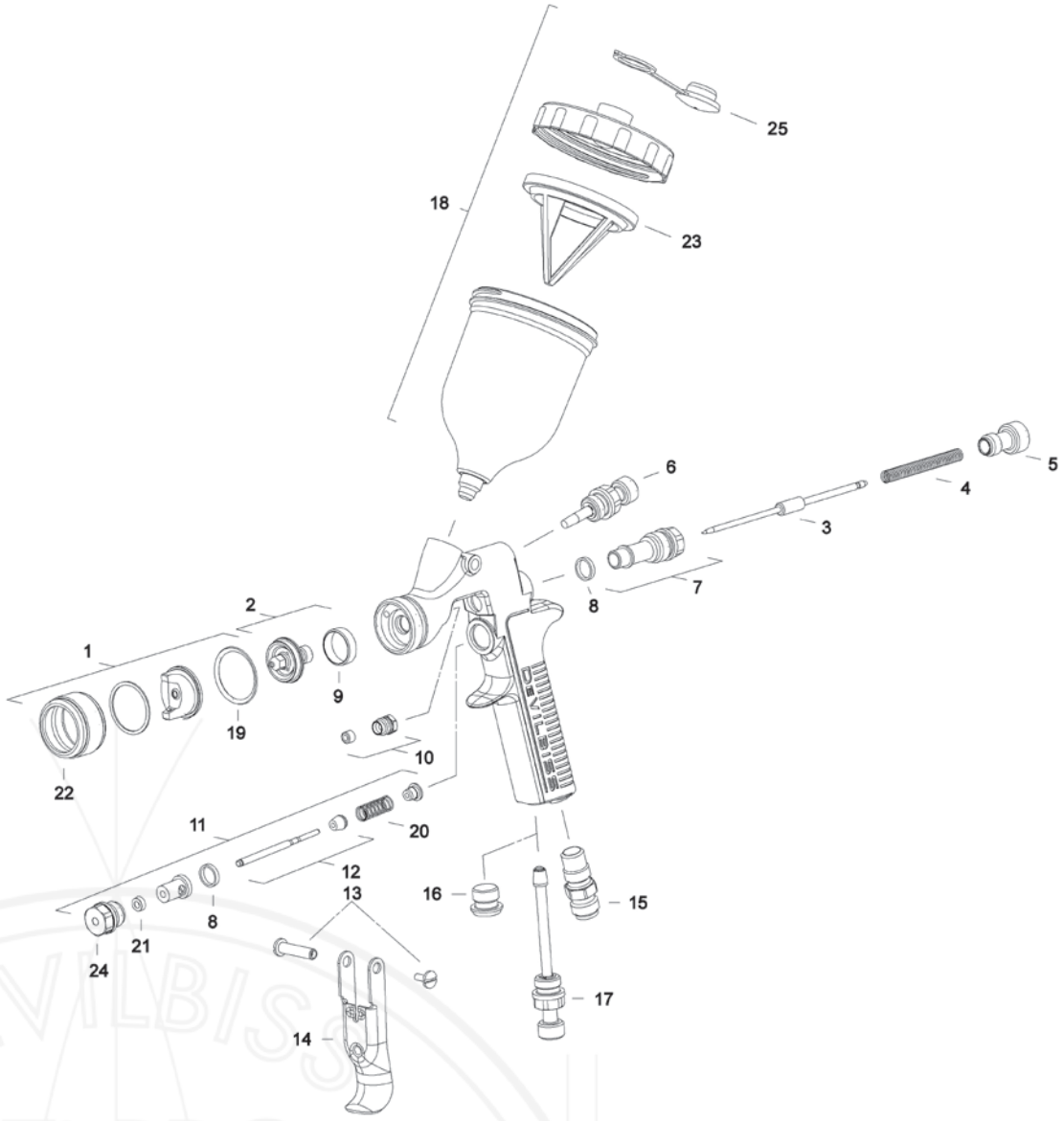

Ref. No	Description	Part Number
1 (SRi)	Air Cap/Retaining ring Trans-Tech	SRI-407-210
		SRI-407-200
1 (SRiW)	Air Cap/Retaining ring HVLP	SRI-407-215
2	Tip 0.7 mm & seal	SRI-2-07-K
	Tip 0.8 mm & seal	SRI-2-08-K
	Tip 1.0 mm & seal	SRI-2-10-K
	Tip 1.2 mm & seal	SRI-2-12-K
3	Needle for 1.0 and 1.2 mm Tip	SRI-3-K
	Needle for 0.7 and 0.8 mm Tip	SRI-37-K
4	Needle Spring	SRI-18-K2
5	Needle Adjusting Knob	SRI-19-K2
6 (SRi)	Spreader Valve	SRI-401-K
6 (SRiW)	Spreader Valve	SRI-415-K
7	Body Bushing and Seal Kit	SRI-17-K
8	Seal	SRI-16-K5
9	Separator	SRI-6-K5
10	Needle Packing Kit of 3	SRI-411-K3

Ref. No	Description	Part Number
11	Air Valve Assembly	SRI-404-K
12	Air Valve Stem Assembly	-
13	Trigger Stud and Screw Kit	SRI-412-K
14	Trigger	SRI-9-K
15 (SRi)	Air Inlet Adaptor	SRI-20-K
15 (SRiW)	Air Inlet Adaptor	SRI-40-K
16	Blanking Plug (to replace airflow valve)	SRI-21
17	Airflow Valve	SRI-402-K
18	Cup	SRI-510
19	Aircap Seal	SRI-35-K5
20	Airvalve Spring	SRI-23-K2
21	Airvalve Seal	-
22	Retaining Ring	-
23	Filter	SRI-42-K3
24	Airvalve Body	-
25	Drip Check Lid Kit of 5	GFC-2-K5
	Service Kit for SRi/SRI-W	SRI-416

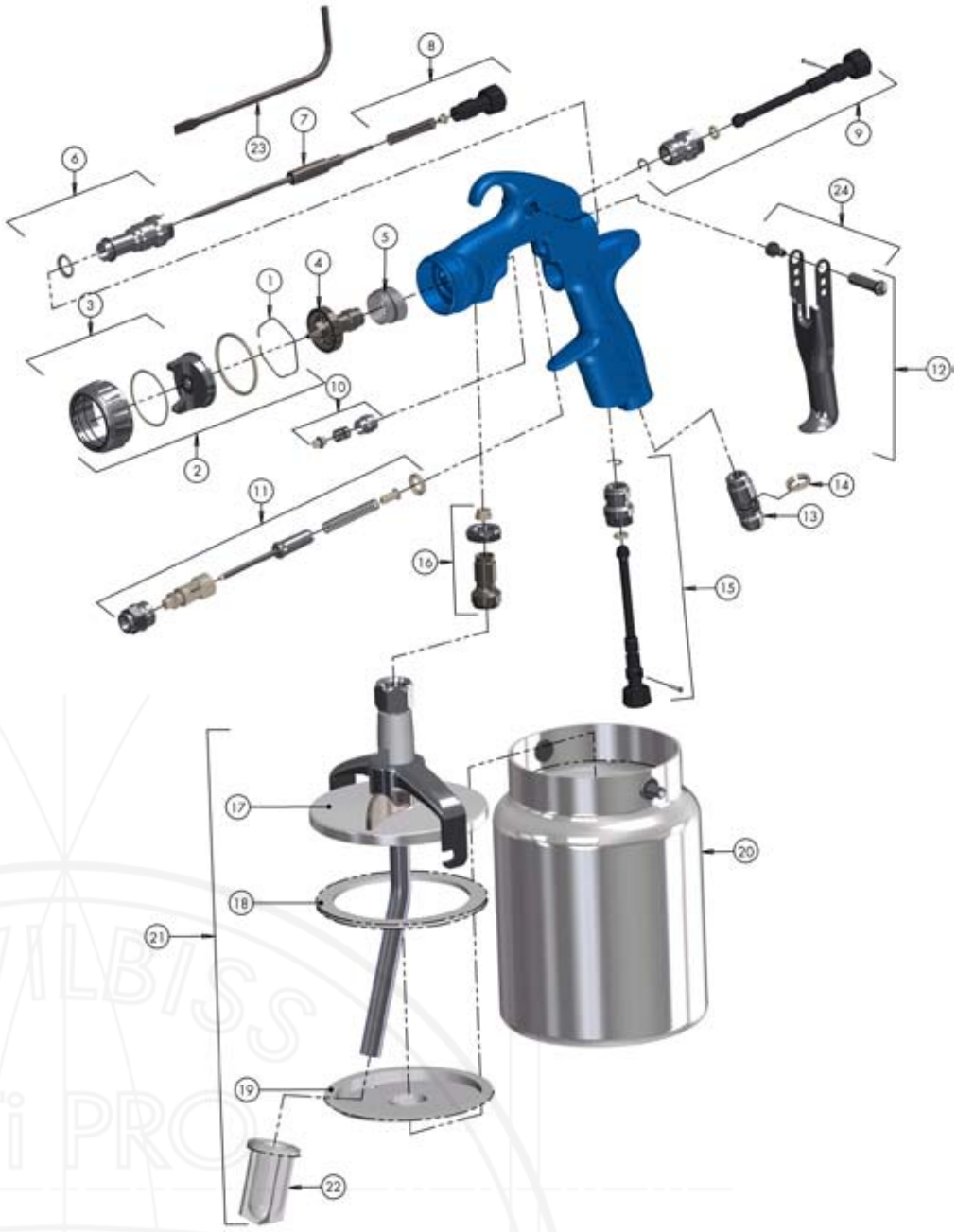

Ref No	Description	Part No.
1	Air Cap Retaining Clip	JGA-156-K5
2	Suction Feed Trans-tech® Aircap	VRIPRO-100-TV1-K
	Pressure Feed Trans-tech® Aircap	VRIPRO-100-TV2-K
3	Air Cap Retaining Ring & Seals	ADV-403-K
4	Fluid Tip - 0.85,14, 16, 18	SP-200S-**-K
5	Separator	SP-626-K5
6	Body Bushing & Seal	SN-6-K
7	Fluid Needle - 0.85, 1.4, 1.6, 1.8 mm	ADV-310-**-K
8	Fluid Adjusting Knob, Spring & Pad Kit	ADV-6-K
9	Spreader Valve Assembly	ADV-401-K
10	Packing, Spring & Packing Nut Kit	SN-404-K
11	Air Valve Replacement Kit	SN-402-K
12	Trigger, Stud & Screw Kit	SN-63-K
13	Air Inlet	SN-9-K

Ref No	Description	Part No.
14	Colour ID Ring Kit (4 Colours)	SN-26-K4
15	Airflow Valve	ADV-401-K
16	Fluid Inlet Connector and seal	ADV-7-K
17	Cup lid assembly	KR-4001-B
18	Lid Gasket - kit of 3	KR-11-K3
19	Drip free diaphragm - kit of 5	KR115-K5
20	Cup	KR-466-K
21	Complete cup	KR-566-1-B
22	Filter	KR-484-K10
23	Torx Key	SPN-8-K2
24	Trigger Stud & Torx Screw (kit of 5)	SN-405-K5
Service Parts		
	Spray Gun repair kit	PRO-415-1
	Seal and Pin Kit, kit of 5	GTI-428-K5

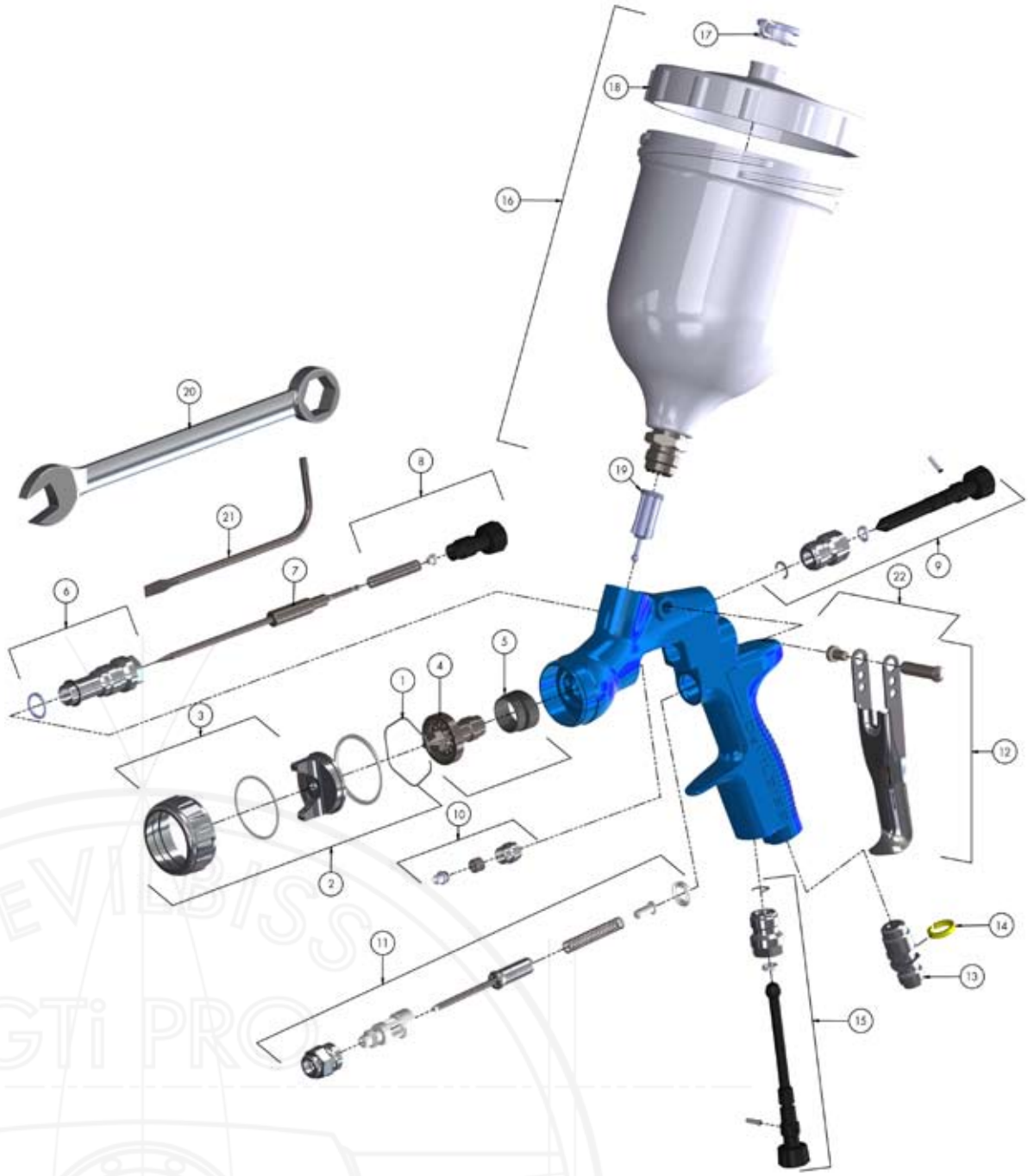

Ref No	Description	Part No.
1	Air Cap Retaining Clip	JGA-156-K5
2	Gravity Feed Trans-tech® Air Cap	VRIPRO-100-TV1-K
3	Air Cap Retaining Ring & Seals	ADV-403-K
4	Fluid Tip 12 or 13	SP-200S-XX-K
5	Separator	SP-626-K5
6	Body Bushing & Seal	SN-6-K
7	Fluid Needle 12 or 13	ADV-310-**-K
8	Fluid Adjusting Knob, Spring & Pad Kit	ADV-6-K
9	Spreader Valve Assembly	ADV-402-K
10	Packing, Spring & Packing Nut Kit	SN-404-K
11	Air Valve Replacement Kit	SN-402-K
12	Trigger, Stud & Screw Kit	SN-63-K
13	Air Inlet	SN-9-K

Ref No	Description	Part No.
14	Colour ID Ring Kit (4 Colours)	SN-26-K4
15	Airflow Valve	ADV-401-K
16	Gravity Cup Kit	GFC-501
17	Drip Check Lid (kit of 5)	GFC-2-K5
18	Gravity Cup Lid	GFC-402
19	Filter	KGP-5-K5
20	Spanner, Torx, Brush & ID Rings	SN-406
21	Torx Key	SPN-8-K2
22	Trigger Stud & Torx Screw (kit of 5)	SN-405-K5
Service Parts		
	Spray Gun repair kit	PRO-415-1
	Seal and Pin Kit, kit of 5	GTI-428-K5

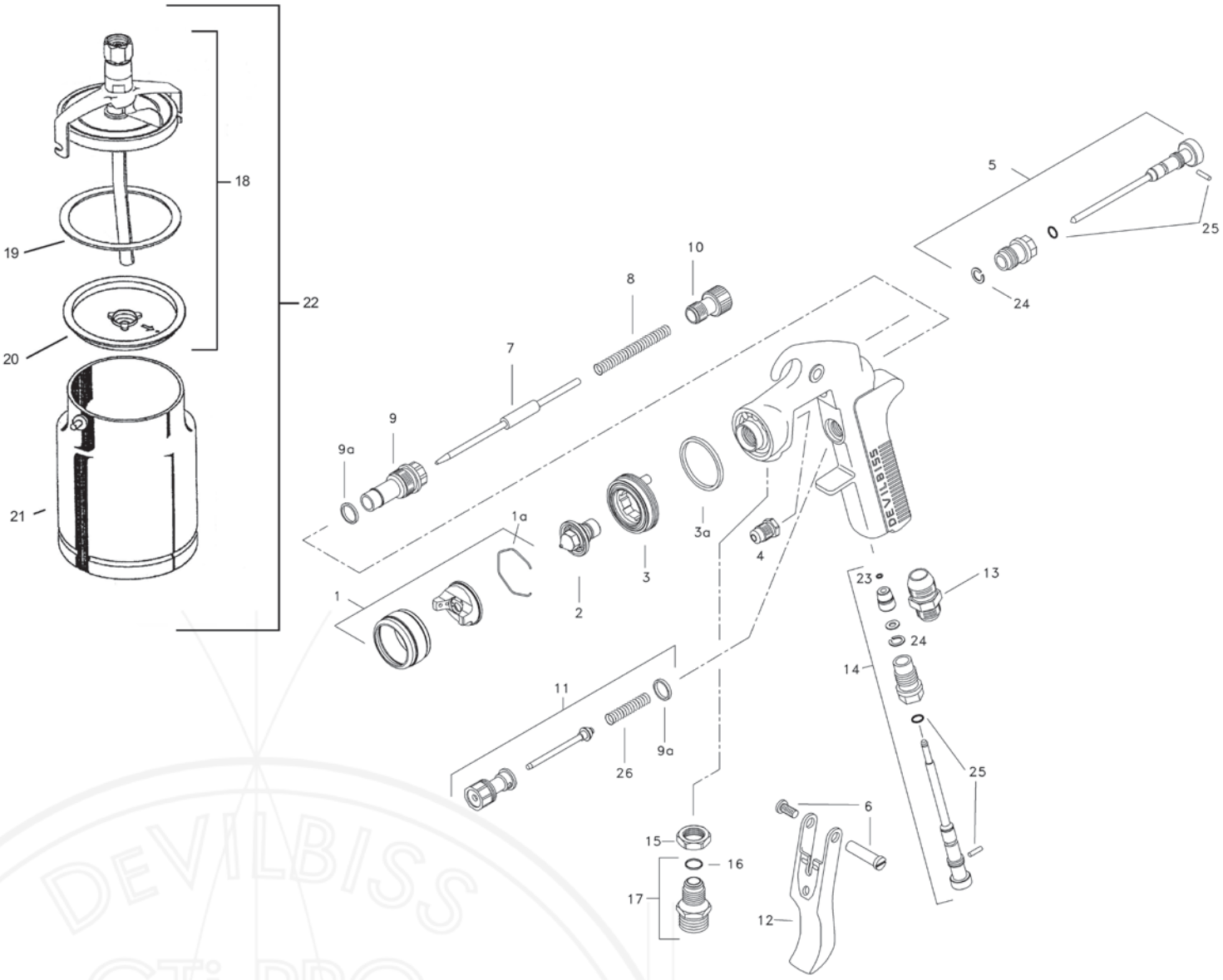

Ref. No	Description	Part No.
1	Air Cap/Retaining ring (* = 186+ or 30+)	AV-4239-***
1a	Spring Clip - Kit of 5	JGA-156-K5
2	Tip (* = EX-1.8mm, FF-1.4mm, FW-1.6mm)	AV-645-*
3	Baffle & Seal	JGD-402-K
3a	Baffle seal - Kit of 5	GTI-33-K5
4	Packing	GTi-445-K2
5	Spreader Valve	GTI-405-K
6	Stud and Screw	GTI-408-K5
7	Needle (*= DEX, FF or FW)	JGA-421*-K
8	Spring - Kit of 5	GTI-409-K5
9	Bushing	JGA-17
9a	Seal - Kit of 5	JGS-72-K5
10	Needle Adjusting Screw	GTI-414-K
11	Valve Assembly	JGK-449-K

Ref. No	Description	Part No.
12	Trigger	GTI-108
13	Connector	JGA-158
14	Airflow Valve	GTI-415-K
15	Lock Nut - Kit of 5	JGA-51-K5
16	Seal	23165-001
17	Fluid Inlet Connector and seal	JGA-159-K
18	Cup lid assembly	KR-4001-B
19	Lid Gasket - kit of 3	KR-11-K3
20	Drip free diaphragm - kit of 5	KR115-K5
21	Cup	KR-466-K
22	Complete cup	KR-566-1-B
23	Circlip	25746-007-K5
24	Circlip	SST-8434-K5
25	Seal & Pin Kit (+ SST-8434-K5)	GTI-428-K5
26	Spring	JGV-262-K5

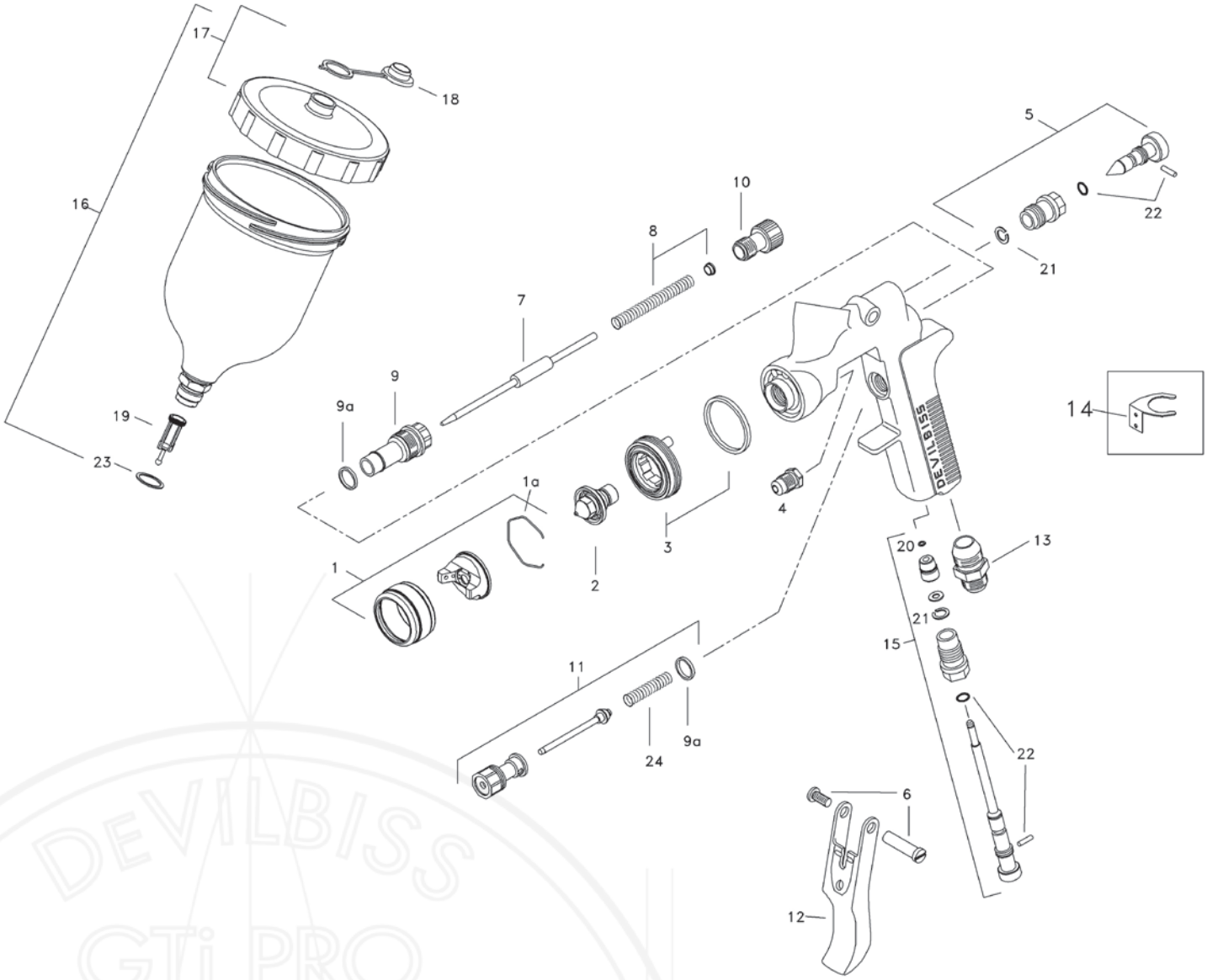

Ref No	Description	Part Number
1	Air Cap/Retaining ring * = 186 or 30	AV-4239-*
1a	Spring Clip	JGA-156-K5
2	Tip (* = EX-1.8mm, FF-1.4mm, FW-1.6mm)	AV-645-*
3	Baffle & Seal	JGD-402-K
4	Packing (kit of 2)	GTi-445-K2
5	Spreader Valve	GTI-404-K
6	Stud and Screw	GTI-408-K5
7	Needle (* = DEX or FF)	JGA-421-*-K
8	Spring	GTI-409-K5
9	Bushing	JGA-17
9a	Seal - kit of 5	JGS-72-K5
10	Needle Adjusting Screw	GTI-414-K
11	Valve Assembly	JGK-449-K

Ref No	Description	Part Number
12	Trigger	GTI-108
13	Connector 1/4	JGA-158
14	Gun Hook	GFG-6
15	Airflow Valve	GTI-415-K
16	1/2 Ltr Gravity Cup Kit	GFC-501
17	Cup Lid	GFC-402
18	Drip Check Lid kit of 5	GFC-2-K5
19	Filter	KGP-5-K5
20	Circlip	25746-007-K5
21	Circlip	SST-8434-K5
22	Seal & Pin Kit	GTI-428-K5
23	Washer	GFC-17-K5
24	Spring	JGV-262-K5

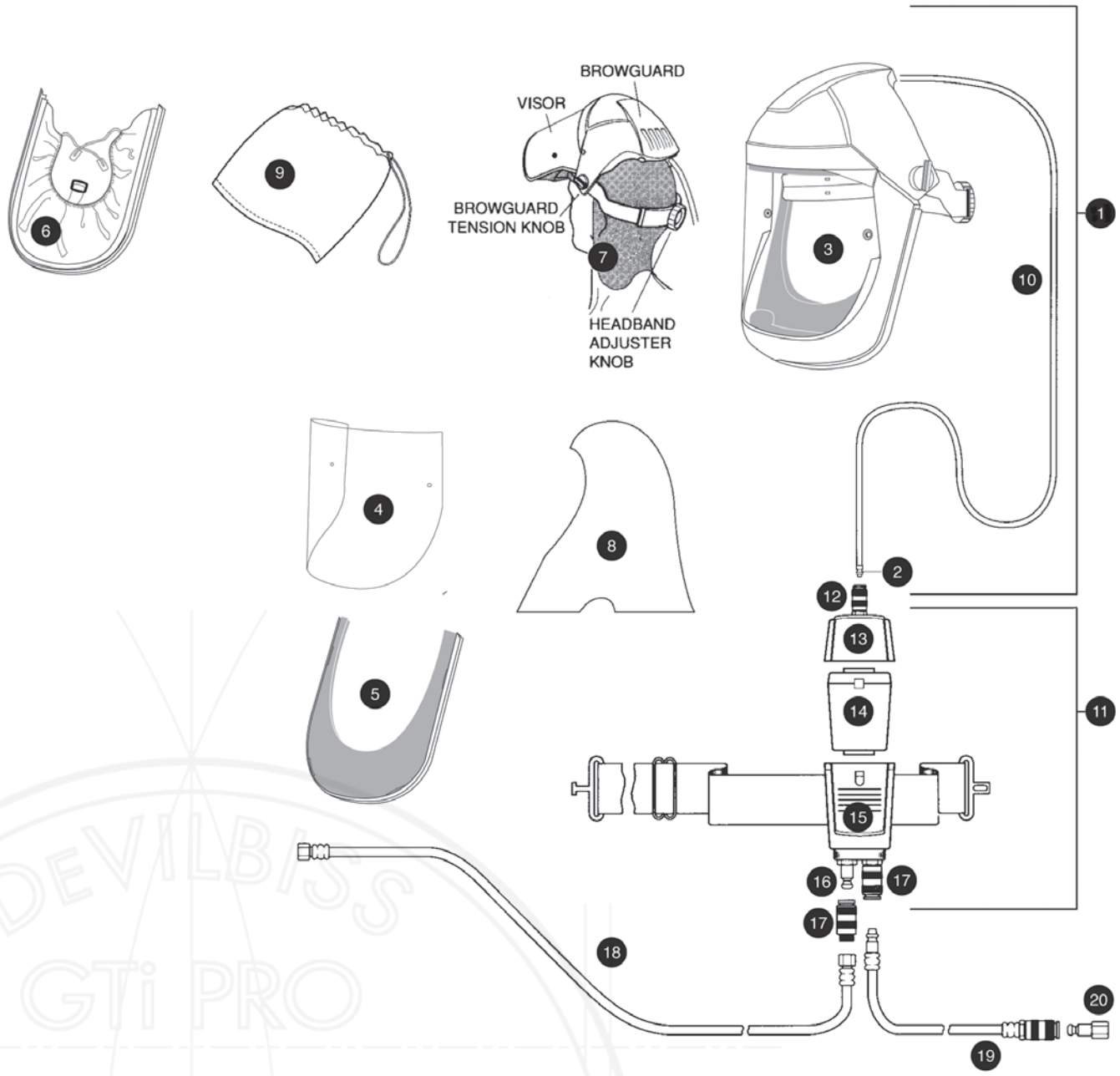

Ref No	Description	Part Number
1	Visor Assembly (Ref Nos 2-10)	MPV-526
2	Quick Detachable Stem	MPV-20
3	Clear Visor (kit of 5)	MPV-478-K5
4	Visor Covers (kit of 10)	MPV-44-K10
5	Face Cartridge — Foam (kit of 5)	MPV-476-K5
6	Face Cartridge — Synthetic (kit of 5)	MPV-477-K5
7	Neck Covers (kit of 5)	MPV-24-K5
8	Hoods (kit of 5)	MPV-2-K5
9	Stowage Bag	MPV-458
10	Tube and Diffuser Assembly	MPV-457
11	Waistbelt Assembly	MPV-518

Ref No	Description	Part Number
12	Quick Detachable Connector	MPV-442
13	Regulator and Housing	MPV-455
14	Disposable Filter	MPV-22
15	Waistbelt and Filter Housing	MPV-519
16	Quick Detachable Stem	MPV-10
17	Quick Detachable Connector	MPV-424
18	10m length M-F QD Fittings	H-6085-QD
	10m length 1/4" Re-usable Fittings	H-6065-B
19	Gun Hose Assembly	MPV-456
20	Quick Detachable Stem	MPV-5

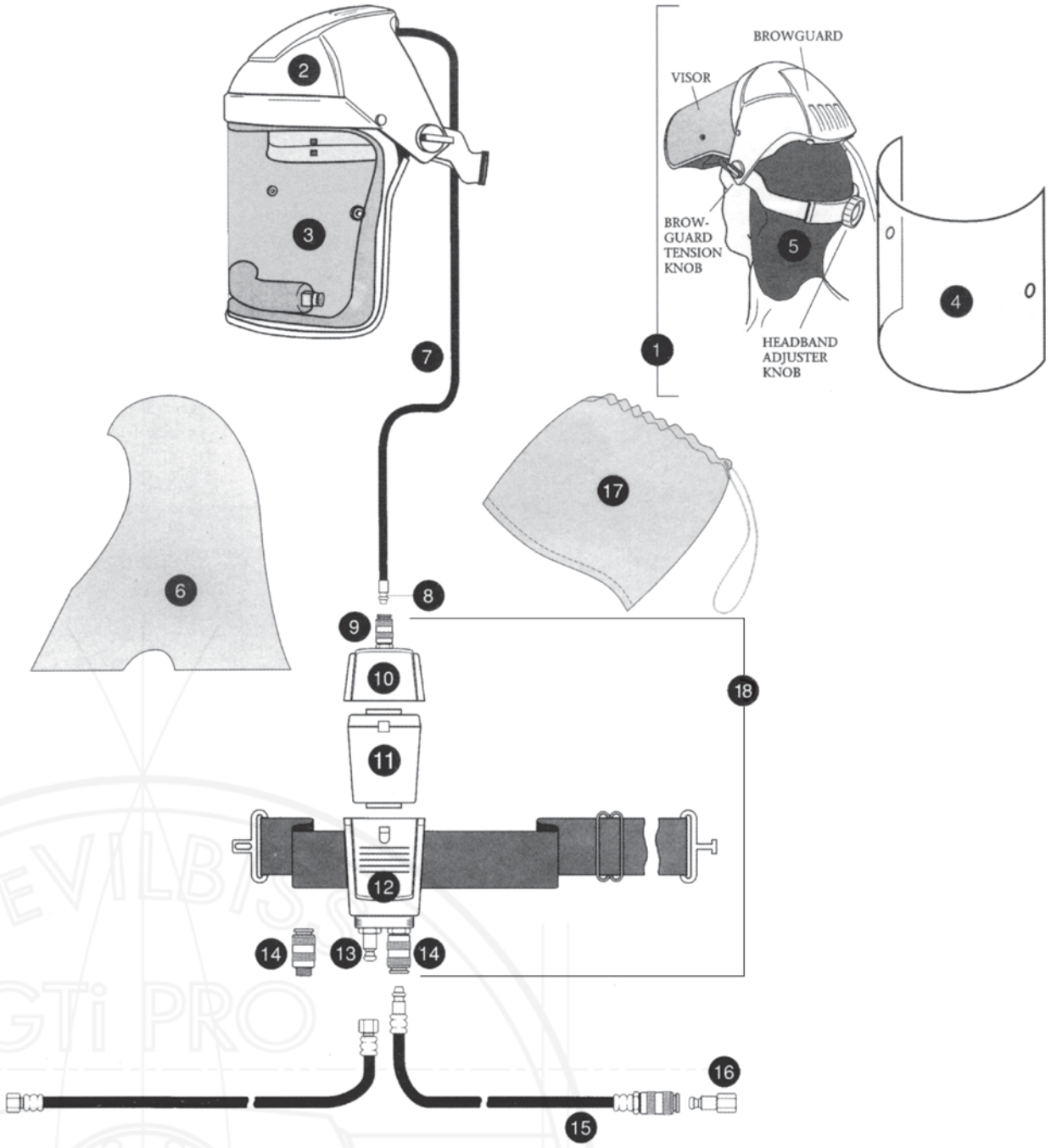

Ref No	Description	Part Number
1	Face mask assembly (Ref Nos 2-8)	MPV-517
2	Browguard assembly	MPV-453
3	Face mask & seal assembly	MPV-454
4	Kit of 10 face mask covers	MPV-1-K10
5	Kit of 5 neck covers	MPV-24-K5
6	Kit of 5 hoods	MPV-2-K5
7	Tube and diffuser assembly	MPV-457
8	Quick detachable stem	MPV-20
9	Quick detachable connector	MPV-442

Ref No	Description	Part Number
10	Regulator and housing	MPV-455
11	Disposable filter	MPV-22
12	Waistbelt and filter housing	MPV-519
13	Quick detachable stem	MPV-10
14	Quick detachable connector	MPV-424
15	Gun hose assembly	MPV-456
16	Quick detachable assembly	MPV-5
17	Stowage bag	MPV-458
18	Waistbelt assembly	MPV-518

DeVILBISS iSYSTEM PRO

SPRAY GUN SET UP SELECTOR: Gun Inlet Pressure 2.0 bar or as stated
LACKDATENBLATT: Eingangsdruck: ca. 2.0 bar wie unten angegeben
PISTOLET ET TABLEAU DES REGLAGES: Pression à l'entrée du pistolet 2.0 bar ou comme indiqué
SCHEDA ALLESTIMENTO AEROGRAFO: pressione aria 2,0 bar o come indicato
CONFIGURACIONES DE PISTOLAS: Presión a la entrada de la pistola 2.0 bar o según lo indicado

Original BMW ColorSystem



		P1 (Trans-Tech)	H1 (HVLP)	T1 (Trans-Tech)	T2 (Trans-Tech)	T110 (Trans-Tech)	HS1 (HVLP)	TS1 (Trans-Tech)
2K ETCH PRIMER FILLER	HS 2K Primer	-	1.3 mm	1.4 mm (2.2 bar)	-	-	-	-
2K HS VOC PRIMER FILLER	HS Wet & Dry Sanding Filler	1.6 - 1.8 mm	-	-	-	-		
WATERBASED PRIMER FILLER	HC Primer 1K	1.6 - 1.8 mm	-	-	-	-	-	-
WET ON WET PRIMER FILLER	HS 2K Primer	-	1.3 mm	1.4 mm (2.2 bar)	1.4 mm (2.2 bar)	1.4 mm (2.2 bar)	-	-
WATERBORNE BASECOAT	Hydrocolor	-	1.3 mm	-	1.4 mm (2.2 bar)	-	0.8 mm	-
COMPLIANT DIRECT GLOSS AND CLEAR	Brilliant Clear VOC Proclear VOC Duraclear	-	1.3 mm	1.4 mm (2.2 bar)	1.4 mm (2.2 bar)	1.4 mm (2.2 bar)	0.8 mm	-

DeVILBISS iSYSTEM PRO

SPRAY GUN SET UP SELECTOR: Gun Inlet Pressure 2.0 bar or as stated
LACKDATENBLATT: Eingangsdruck: ca. 2.0 bar wie unten angegeben
PISTOLET ET TABLEAU DES REGLAGES: Pression à l'entrée du pistolet 2.0 bar ou comme indiqué
SCHEDA ALLESTIMENTO AEROGRAFO: pressione aria 2,0 bar o come indicato
CONFIGURACIONES DE PISTOLAS: Presión a la entrada de la pistola 2.0 bar o según lo indicado

DEBEER CAR REFINISHES A Valspar Company



CATEGORY	MATERIAL	PRIMER	BASE	CLEAR	BASE	CLEAR	SMART
WASH PRIMER	1-15 / 1-17	P1 1.4-1.6	-	-	-	-	TS1 0.8-1.0
EPOXY PRIMER	1-7510/7520	P1 1.6-1.8	-	-	-	-	TS1 1.0-1.2
"EPOXY PRIMER WET ON WET"	1-70 white and grey	P1 1.6-1.8	-	-	-	-	TS1 1.0-1.2
HS SURFACER 2K	8-145 2K HS grey	P1 1.6-1.8	-	-	-	-	TS1 1.0-1.2
	8-145/10 2K HS white	P1 1.6-1.8	-	-	-	-	TS1 1.0-1.2
	8-145/40 2K HS black	P1 1.6-1.8	-		-	-	TS1 1.0-1.2
"HS SURFACER 2K WET ON WET"	8-145 2K HS grey	-	-	TE20 - 1.3-1.4	-	T2 1.3-1.4	TS1 1.0-1.2
	8-145/10 2K HS white	-	-	TE20 - 1.3-1.4	-	T2 1.3-1.4	TS1 1.0-1.2
	8-145/40 2K HS black	-	-	TE20 - 1.3-1.4	-	T2 1.3-1.4	TS1 1.0-1.2
	30-746/74640	-	-	TE20 - 1.3-1.4	-	T2 1.3-1.4	TS1 1.0-1.2
WATERBASE TOPCOAT	Series 900, 900+	-	TE10 - 1.3	-	H1/T1/T110 1.3	-	HS1/TS1 1.0-1.2
CLEARCOAT	8-104 HS Clearcoat	-	-	TE20 - 1.3-1.4	-	T2 1.3-1.4	TS1 1.0-1.2
	8-214 HS Scratch Resistant Clearcoat	-	-	TE20 - 1.3-1.4	-	T2 1.3-1.4	TS1 0.8-1.0
	8-314 HS 420 Speed Clear	-	-	TE20 - 1.3-1.4	-	T2 1.3-1.4	TS1 0.8-1.0
	8-414 HS420 Clearcoat	-	-	TE20 - 1.3-1.4	-	T2 1.3-1.4	TS1 0.8-1.0
SOLID COLOUR 2K LD	Series 3000	-	-	TE20 - 1.3	-	T2 1.3	TS1 1.0-1.2
	Series 3000 BEROTHANE HS420	-	-	TE20 - 1.3	-	T2 1.3	TS1 1.0-1.2

DeVilbiss Automotive Refinishing UK: +44 (0) 1202 571111 F: +33 (0) 4 75 75 27 80 D: +49 (0) 6074 403 251 Web: http://www.devilbisseu.com

DeVILBISS iSYSTEM PRO

SPRAY GUN SET UP SELECTOR: Gun Inlet Pressure 2.0 bar or as stated
LACKDATENBLATT: Eingangsdruck: ca. 2.0 bar wie unten angegeben
PISTOLET ET TABLEAU DES REGLAGES: Pression à l'entrée du pistolet 2.0 bar ou comme indiqué
SCHEDA ALLESTIMENTO AEROGRAFO: pressione aria 2,0 bar o come indicato
CONFIGURACIONES DE PISTOLAS: Presión a la entrada de la pistola 2.0 bar o según lo indicado

Cromax™



CATEGORY	MATERIAL	PRIMER	BASE	CLEAR	BASE	CLEAR	SMART
PRIMERS	635R Etching Primer	P1-1.4	-	-	-	-	TS1-0.8
	825R Wash Primer Surfacer	P1-1.4	-	-	-	-	TS1-0.8
	901R/907R Universal 2K Plastic Primer	P1-1.4	-	-	-	-	TS1-0.8
SURFACERS	1051R/1057R High Productive Surfacer	P1-1.6/1.8	-	-	-	-	TS1-1.0/1.2
	PS1061-PS1064-PS1067 Cromax Pro Surfacer	P1-1.6/1.8	-	-	-	-	TS1-1.0/1.2
NON SANDING SURFACERS	NS2602-NS2607 Non Sanding Primer Surfacer	P1-1.4	TE10-1.3	TE10-1.3	T1-1.3	T1-1.3	TS1-0.8
2K SINGLE STAGE	Centari® 5035 Low Emission 2K Topcoat	-	TE20-1.2/1.3	TE20-1.2/1.3	T2-1.2/1.3	T2-1.2/1.3	HS1/TS1-1.0/1.2
SOLVENTBORNE BASECOAT	Centari® 6000 Low Emission Basecoat	-	TE20-1.2/1.3	-	T2-1.2/1.3	-	HS1/TS1-1.0/1.2
WATERBORNE BASECOAT	Cromax® Waterborne Basecoat	-	TE20-1.2/1.3	-	T2-1.2/1.3	-	HS1/TS1-1.0/1.2
	Cromax® Pro Waterborne Basecoat	-	TE10/TE20 - 1.2/1.3	-	T2-1.2/1.3	-	HS1/TS1-1.0/1.2
CLEARCOATS	3750S-3760S Ultra Productive VOC Clear	-	-	TE20-1.2/1.3	-	T2-1.2/1.3	HS1/TS1-1.0/1.2
	CC6300 VOC Protect Clear	-	-	TE20-1.2/1.3	-	T2-1.2/1.3	HS1/TS1-1.0/1.2
	CC6400 Standard VOC Clear	-	-	TE20-1.2/1.3	-	T2-1.2/1.3	HS1/TS1-1.0/1.2
	CC6600 Cromax Pro Star Clear	-	-	TE20-1.2/1.3	-	T2-1.2/1.3	HS1/TS1-1.0/1.2
	CC6700 Ultra Performance Energy Clear	-	-	TE20-1.2/1.3	-	T2-1.2/1.3	HS1/TS1-1.0/1.2

DeVilbiss Automotive Refinishing UK: +44 (0) 1202 571111 F: +33 (0) 4 75 75 27 80 D: +49 (0) 6074 403 251 Web: http://www.devilbisseu.com

DeVILBISS
i system pro

SPRAY GUN SET UP SELECTOR: Gun Inlet Pressure 2.0 bar or as stated
LACKDATENBLATT: Eingangsdruck: ca. 2.0 bar wie unten angegeben
PISTOLET ET TABLEAU DES REGLAGES: Pression à l'entrée du pistolet 2.0 bar ou comme indiqué
SCHEDA ALLESTIMENTO AEROGRAFO: pressione aria 2,0 bar o come indicato
CONFIGURACIONES DE PISTOLAS: Presión a la entrada de la pistola 2.0 bar o según lo indicado

ETALON
www.etalon.gr



CATEGORY	MATERIAL	PRIMER	BASE	CLEAR	BASE	CLEAR	SMART
PRIMER/FILLER	1K Primer	1.4-1.6	-	-	-	-	TS1 1.0-1.2
	Plastic Primer	-	-	TE10 1.2-1.3	-	T1 1.2-1.3	TS1 0.8-1.0
	Epoxy Primer	1.6-1.8	-	-	-	-	-
	4:1 Primer	1.6-1.8	-	-	-	-	TS1 1.0-1.2
	5:1 HS Primer	1.8-2.0	-	-	-	-	-
BASE		-	-	-	-	-	-
CLEAR	UHS	-	-	TE10 1.3/ TE20 1.3	-	T1 1.3 / T2 1.3	TS1 0.8-1.0
	SR	-	-	TE10 1.3/ TE20 1.3	-	T1 1.3 / T2 1.3	TS1 0.8-1.0
	ETAVALUE	-	-	TE10 1.3/ TE20 1.3	-	T1 1.3 / T2 1.3	TS1 0.8-1.0

DeVILBISS

i system pro

SPRAY GUN SET UP SELECTOR: Gun Inlet Pressure 2.0 bar or as stated
LACKDATENBLATT: Eingangsdruck: ca. 2.0 bar wie unten angegeben
PISTOLET ET TABLEAU DES REGLAGES: Pression à l'entrée du pistolet 2.0 bar ou comme indiqué
SCHEDA ALLESTIMENTO AEROGRAFO: pressione aria 2,0 bar o come indicato
CONFIGURACIONES DE PISTOLAS: Presión a la entrada de la pistola 2.0 bar o según lo indicado

Glasurit



CATEGORY	MATERIAL	PRIMER	BASE	CLEAR	BASE	CLEAR	SMART	GPi
POLYESTER	UP Polyester Spray Filler 1006-26	P1-2.5 @ 2.0 Bar	-	-	-	-	-	-
PRIMERS	Etch Primer Filler 283-150 VOC	P1-1.6/1.8 @ 2.0 Bar	-	-	-	H1-1.3 @ 2.0 BAR T1-1.3/1.4 @ 2.2 BAR T2-1.3/1.4 @ 2.2 BAR	-	1.6 - 1.8 @ 2.0 BAR
FILLERS	Primer Filler 285-	P1-1.6/1.8 @ 2.0 BAR	-	-	-	-	-	1.6 - 1.8 @ 2.0 BAR
	1K-Primer Filler 176-72	P1-1.6/1.8 @ 2.0 BAR	-	-	-	-	-	1.6 - 1.8 @ 2.0 BAR
NON SANDING PRIMER	Non-Sanding-Filler 285-VOC	P1-1.4 @2.0 BAR	-	TE10-1.3/1.4 @ 2.0 BAR TE20-1.3/1.4 @ 2.0 BAR HV30-1.3 @ 1.75 BAR	-	H1-1.3 @ 2.0 Bar T1-1.3/1.4 @ 2.2 Bar T2-1.3/1.4 @ 2.2 Bar T110-1.3/1.4 @ 2.0 Bar	-	-
2K SINGLE STAGE	HS/VOC 2K-Topcoat 22-	-	-	TE10-1.3/1.4 @ 2.0 Bar TE20-1.3/1.4 @ 2.0 Bar HV30-1.3 @ 1.75 Bar	-	H1-1.3 @ 2.0 Bar T1-1.3/1.4 @ 2.2 Bar T2-1.3/1.4 @ 2.2 Bar T110-1.3/1.4 @ 2.0 Bar	HS1-1.0/1.2 @ 1.5-2.0 Bar TS1-1.0/1.2 @ 1.5-2.0 Bar	-
SOLVENTBORNE BASECOAT	55-Line Basecoat	-	TE20-1.4 @ 2.0 BAR HV30-13 @ 1.75 BAR	-	H1-13 @ 2.0 BAR T2-1.4 @ 2.2 BAR	-	HS1-1.0/1.2 @ 1.5-2.0 Bar TS1-1.0/1.2 @ 1.5-2.0 Bar	-
WATERBORNE BASECOAT	90-Line Basecoat	-	TE20-1.4 @ 2.0 BAR HV30-13 @ 1.75 BAR	-	H1-13 @ 2.0 BAR T2-1.4 @ 2.2 BAR	-	HS1-1.0/1.2 @ 1.5-2.0 Bar TS1-1.0/1.2 @ 1.5-2.0 Bar	-
CLEARCOATS	HS / VOC Clearcoat 923-	-	-	TE10-1.3/1.4 @ 2.0 BAR TE20-1.3/1.4 @ 2.0 BAR HV30-1.3 @ 1.75 BAR	-	H1-1.3 @ 2.0 BAR T1-1.3/1.4 @ 2.2 BAR T2-1.3/1.4 @ 2.2 BAR T110-1.3/1.4 @ 2.0 BAR	HS1-1.0/1.2 @ 1.5-2.0 Bar TS1-1.0/1.2 @ 1.5-2.0 Bar	-

DeVILBISS
i system pro

SPRAY GUN SET UP SELECTOR: Gun Inlet Pressure 2.0 bar or as stated
LACKDATENBLATT: Eingangsdruck: ca. 2.0 bar wie unten angegeben
PISTOLET ET TABLEAU DES REGLAGES: Pression à l'entrée du pistolet 2.0 bar ou comme indiqué
SCHEDA ALLESTIMENTO AEROGRAFO: pressione aria 2,0 bar o come indicato
CONFIGURACIONES DE PISTOLAS: Presión a la entrada de la pistola 2.0 bar o según lo indicado

GYSO



CATEGORY	MATERIAL	PRIMER	BASE	CLEAR	BASE	CLEAR	SMART
PRIMER	Premium Füller G20/G21/G22 Standard	P1-1,8/1,6	-	-	-	-	TS1- 1,2/1,4
	Dickschicht	P1-2,0	-	-	-	-	-
	No sanding	P1-1,4	-	-	-	-	TS1- 1,0/0,8
BASE		-	-	-	-	-	-
CLEAR	GYSO Gold Clear	-	-	TE20-1,3/TE10-1,3	-	T2-1,3 / T1-1,3	TS1-1,0/1,2/1,4
	GYSO Eco Clear	-	-	TE20-1,3/TE10-1,3	-	T2-1,3 / T1-1,3	TS1-1,0/1,2/1,4
	Top Klarlack S80	-	-	TE20-1,3/TE10-1,3	-	T2-1,3 / T1-1,3	TS1-1,0/1,2/1,4

DeVILBISS
i system pro

SPRAY GUN SET UP SELECTOR: Gun Inlet Pressure 2.0 bar or as stated
LACKDATENBLATT: Eingangsdruck: ca. 2.0 bar wie unten angegeben
PISTOLET ET TABLEAU DES REGLAGES: Pression à l'entrée du pistolet 2.0 bar ou comme indiqué
SCHEDA ALLESTIMENTO AEROGRAFO: pressione aria 2,0 bar o come indicato
CONFIGURACIONES DE PISTOLAS: Presión a la entrada de la pistola 2.0 bar o según lo indicado

KAPCI COATINGS



		P1 (Trans-Tech)	H1 (HVLP)	T1 (Trans-Tech)	T2 (Trans-Tech)	T110 (Trans-Tech)	HS1 (HVLP)	TS1 (Trans-Tech)
PRIMERS & FILLERS	Kapci 625 2K filler	1.6 - 1.8 mm	PRi	-	-	-	-	-
	Kapci 630 2K filler	1.6 - 1.8 mm	PRi	-	-	-	-	-
	Kapci 633 2K filler	1.6 - 1.8 mm	PRi	-	-	-	-	-
	Kapci 800 1K Etch primer	1.6 - 1.8 mm	PRi	-	-	-	-	-
	Kapci 805 2K Wash primer	1.6 - 1.8 mm	PRi	-	-	-	-	-
	Kapci 880 2K Epoxy primer	1.6 - 1.8 mm	PRi	-	-	-	-	-
	Kapci 810 Epoxy Primer	1.8 - 2.2 mm	PRi	PRi	PRi	PRi	-	-
BASECOATS	Kapcibase 640 solid colour basecoat	GTi Pro	1.2 - 1.3 mm	1.2 - 1.3 mm	1.2 - 1.3 mm	1.2 - 1.3 mm	0.8 - 1.0 mm	0.8 - 1.0 mm
	Kapcibase 670 basecoats	GTi Pro	1.2 - 1.3 mm	1.2 - 1.3 mm	1.2 - 1.3 mm	1.2 - 1.3 mm	0.8 - 1.0 mm	0.8 - 1.0 mm
	Kapci Dima 9670 Waterborne basecoats	GTi Pro	1.2 - 1.3 mm	1.2 - 1.3 mm	1.2 - 1.3 mm	1.2 - 1.3 mm	0.8 - 1.0 mm	0.8 - 1.0 mm
TOPCOAT	Kapcicyl 660 2K Acrylic mixing system	GTi Pro	1.3 - 1.4 mm	1.3 - 1.4 mm	1.3 - 1.4 mm	1.3 - 1.4 mm	0.8 - 1.0 mm	0.8 - 1.0 mm
MEDIUM SOLIDS CLEARS	Kapci 888 2K MS Acrylic clear coat	GTi Pro	1.3 - 1.4 mm	1.3 - 1.4 mm	1.3 - 1.4 mm	1.3 - 1.4 mm	1.0 - 1.2 mm	1.0 - 1.2 mm
	Kapci 3001 2K MS Acrylic clear coat	GTi Pro	1.3 - 1.4 mm	1.3 - 1.4 mm	1.3 - 1.4 mm	1.3 - 1.4 mm	1.0 - 1.2 mm	1.0 - 1.2 mm
	Kapci 3200 2K MS Acrylic clear coat	GTi Pro	1.3 - 1.4 mm	1.3 - 1.4 mm	1.3 - 1.4 mm	1.3 - 1.4 mm	1.0 - 1.2 mm	1.0 - 1.2 mm
	Kapci 3300 2K MS Extra fast drying acrylic clear coat	GTi Pro	1.3 - 1.4 mm	1.3 - 1.4 mm	1.3 - 1.4 mm	1.3 - 1.4 mm	1.0 - 1.2 mm	1.0 - 1.2 mm
	Kapci 9999 2K MS Acrylic clear coat	GTi Pro	1.3 - 1.4 mm	1.3 - 1.4 mm	1.3 - 1.4 mm	1.3 - 1.4 mm	1.0 - 1.2 mm	1.0 - 1.2 mm
	Kapci 9999CN 2K MS Fast drying acrylic clear coat	GTi Pro	1.3 - 1.4 mm	1.3 - 1.4 mm	1.3 - 1.4 mm	1.3 - 1.4 mm	1.0 - 1.2 mm	1.0 - 1.2 mm
HIGH SOLIDS CLEARS	Kapci 6100 2K HS Acrylic clear coat Low VOC	GTi Pro	-	-	1.4 mm	-	1.0 - 1.2 mm	1.0 - 1.2 mm

DeVILBISS

i system pro

SPRAY GUN SET UP SELECTOR: Gun Inlet Pressure 2.0 bar or as stated
LACKDATENBLATT: Eingangsdruck: ca. 2.0 bar wie unten angegeben
PISTOLET ET TABLEAU DES REGLAGES: Pression à l'entrée du pistolet 2.0 bar ou comme indiqué
SCHEDA ALLESTIMENTO AEROGRAFO: pressione aria 2,0 bar o come indicato
CONFIGURACIONES DE PISTOLAS: Presión a la entrada de la pistola 2.0 bar o según lo indicado

KLAR Professional



CATEGORY	MATERIAL	PRIMER	BASE	CLEAR	BASE	CLEAR	SMART
POLYESTER	Polyester Spray Filler	2,0 - 2,5 mm 1,5 - 2,0 bar	-	-	-	-	-
WASH PRIMER	GPH-30.1	-	TE10 1,3 - 1,4 mm 1,5 - 2,0 bar	-	TE110/T1 1,3 - 1,4 mm 1,5 - 2,0 bar	-	-
SMOOTH SURFACER	Polyester Based Primer	1,8 - 2,0 mm 1,5 - 2,0 bar	-	-	-	-	-
NON SANDING PRIMER	GF-11-3 WoW	-	TE10/TE20 1,2 - 1,3 mm 1,5 - 2,0 bar	-	TE110/T1 1,3 - 1,4 mm 1,5 - 2,0 bar	-	-
FILLERS	GF-11-1	1,6 - 1,8 mm 1,5 - 2,0 bar	-	-	-	-	-
	GF-11-2	1,6 - 1,8 mm 1,5 - 2,0 bar	-	-	-	-	-
	GF-11-3	1,6 - 1,8 mm 1,5 - 2,0 bar	-	-	-	-	-
2K SOLID COLOURS	Klar Special Coatings 2K	-	TE10/TE20 1,2 - 1,3 mm 1,8 - 2,0 bar	-	TE110/T1/T2 1,3 - 1,4 mm 1,8 - 2,0 bar	-	-
SOLVENTBORNE BASECOAT	Klar Special Coatings 1K	-	TE20/HV30 1,2 - 1,3 mm 1,8 - 2,0 bar	-	T1/H1 1,2 - 1,3 mm 1,8 - 2,0 bar	-	-
WATERBORNE BASECOAT	Aqua Base	-	TE20/HV30 1,2 - 1,3 mm 1,8 - 2,0 bar	-	T1/H1 1,2 - 1,3 mm 1,8 - 2,0 bar	-	-
CLEARCOATS	L-12-1	-	-	TE10/TE20 1,2 - 1,3 mm 1,8 - 2,0 bar	-	TE110/T1/T2 1,3 - 1,4 mm 1,8 - 2,0 bar	-
	L-13-1	-	-	TE10/TE20 1,2 - 1,3 mm 1,8 - 2,0 bar	-	TE110/T1/T2 1,3 - 1,4 mm 1,8 - 2,0 bar	-
	Klar Top Clear	-	-	TE10/TE20 1,2 - 1,3 mm 1,8 - 2,0 bar	-	TE110/T1/T2 1,3 - 1,4 mm 1,8 - 2,0 bar	-
	LM-12-1	-	-	TE10/TE20 1,2 - 1,3 mm 1,8 - 2,0 bar	-	TE110/T1/T2 1,3 - 1,4 mm 1,8 - 2,0 bar	-
SPOT REPAIRS	SB/WB basecoat	-	-	-	-	-	HS1 0,8 mm 1,3 - 1,8 bar
	Clearcoats	-	-	-	-	-	TS1 1,0 mm 1,3 - 1,8 bar

DeVilbiss Automotive Refinishing UK: +44 (0) 1202 571111 F: +33 (0) 4 75 75 27 80 D: +49 (0) 6074 403 251 Web: http://www.devilbisseu.com

DEVILBISS

i system pro

SPRAY GUN SET UP SELECTOR: Gun Inlet Pressure 2.0 bar or as stated
LACKDATENBLATT: Eingangsdruck: ca. 2.0 bar wie unten angegeben
PISTOLET ET TABLEAU DES REGLAGES: Pression à l'entrée du pistolet 2.0 bar ou comme indiqué
SCHEDA ALLESTIMENTO AEROGRAFO: pressione aria 2,0 bar o come indicato
CONFIGURACIONES DE PISTOLAS: Presión a la entrada de la pistola 2.0 bar o según lo indicado

LECHLER



CATEGORY	MATERIAL	PRIMER	BASE	CLEAR	BASE	CLEAR	SMART
POLYESTER	04210 - POLYFAN RUSH	P1 - 2,0/2,5	-	-	-	-	-
PRIMER	04318 -FIX-O-DUR	P1-1,4	-	-	-	T1 - 1,3	TS1 1,2
	04363 - UNIVERSAL PRIMER	P1-1,4	-	-	-	T1 - 1,3	TS1 1,2
	05720 - MONOPRIMER	P1-1,4	-	-	-	T1 - 1,3	TS1 1,2
	05781 - CLEARPRIMER	P1-1,4	-	-	-	T1 - 1,3	TS1 1,0
	04384 -EPOFAN PRIMER R-EC	P1-1,4	-	-	-	T1 - 1,3	TS1 1,2
FILLER 2K	04706/10 MACROFAN HS HIGTFILLER	P1 -1,6/1,8	-	-	-	-	-
	04806/10 MACROFAN RAPID FILLER	P1 - 1,4/1,8	-	-	-	-	-
	04302/06/10 MACROFAN AUTOLEVEL PRIMER	P1 - 1,4/1,8	-	-	-	-	-
	04804 MAC 85 MACROFAN HS ISOSEALER	P1 - 1,6/1,8	-	-	-	-	-
	04384 EPOFAN PRIMER R-EC	P1 - 1,6/1,8	-	-	-	-	-
SEALER	04384 EPOFAN PRIMER R-EC	P1-1,4	-	TE 20 - 1,4	-	T1/T2 -1,4	TS1 -1,0/1,2
	04804 - MAC 85 - MACROFAN HS ISOSEALER	P1-1,4	-	TE 10 -1,3 /1,4	-	T1/T2 -1,4	TS1 -1,0/1,2

DeVilbiss Automotive Refinishing UK: +44 (0) 1202 571111 F: +33 (0) 4 75 75 27 80 D: +49 (0) 6074 403 251 Web: http://www.devilbisseu.com

DeVILBISS i system pro

SPRAY GUN SET UP SELECTOR: Gun Inlet Pressure 2.0 bar or as stated
LACKDATENBLATT: Eingangsdruck: ca. 2.0 bar wie unten angegeben
PISTOLET ET TABLEAU DES REGLAGES: Pression à l'entrée du pistolet 2.0 bar ou comme indiqué
SCHEDA ALLESTIMENTO AEROGRAFO: pressione aria 2,0 bar o come indicato
CONFIGURACIONES DE PISTOLAS: Presión a la entrada de la pistola 2.0 bar o según lo indicado

LECHLER



CATEGORY	MATERIAL	PRIMER	BASE	CLEAR	BASE	CLEAR	SMART
SEALER (continued)	04122 - MAC 9 - MACROFAN HI-GARD SEALER	P1-1,4	-	TE 10 -1,3 /1,4	-	T1/T2 -1,3/1,4	TS1 -1,0/1,2
	04302/06/10 MACROFAN AUTOLEVEL PRIMER	P1-1,4	-	TE 10/20 -1,3 /1,4	-	T1/T2 -1,3-1,4	TS1 -1,0/1,2
SOLVENTBORNE	BSB BASE COAT	-	TE 10 1,3/1,4	-	T1-1,2/13 H1 -1,3	-	TS1 1,2 HS 1- 08/1,0
CLEARCOATS	MC 411 MACROFAN PROF UHS 2:1	-	-	TE 20 - 1,3	-	T1 - 1,2/1,3	TS1 -1,0/1,2
	MC 420 MACROFAN UHS 2:1	-	-	TE 20 -1,2	-	T2 - 1,2	TS1 -1,0/1,2
	MC 421 MACROFAN PLUS UHS 2:1	-	-	TE 20 - 1,3	-	T1 - 1,2/1,3	TS1 -1,0/1,2
	MC 422 MACROFAN ELITE UHS 3:1	-	-	TE 20 - 1,2/1,3	-	T2 - 1,2	TS1 -1,0/1,2
	MC 450 MACROFAN AUTOGARD UHS 3:1	-	-	TE 20 - 1,2/1,3	-	T1 - 1,2/1,3	TS1 -1,0/1,2
SOLID COLOR	MAC 1 MACROFAN HS SYSTEM	-	-	TE 20 - 1,2/1,3	-	T1 - 1,2/1,3	TS1 -1,0/1,2
	MAC 4 MACROFAN UHS SYSTEM TOP COAT	-	-	TE 20 - 1,2/1,3	-	T1 - 1,2/1,3	TS1 -1,0/1,2
	MAC 5 MACROFAN 1K TOP COAT	-	-	TE 20 - 1,3	-	T1 - 1,3	TS1 -1,0/1,2
WATERBORNE	HYDROFAN BASE COAT	-	TE 10 1,3 - HV30 1,3	-	T1 1,3 - H1 1,3	-	TS1 -1,0/1,2 HS1 - 08/1,0

DeVILBISS iSYSTEM PRO

SPRAY GUN SET UP SELECTOR: Gun Inlet Pressure 2.0 bar or as stated
LACKDATENBLATT: Eingangsdruck: ca. 2.0 bar wie unten angegeben
PISTOLET ET TABLEAU DES REGLAGES: Pression à l'entrée du pistolet 2.0 bar ou comme indiqué
SCHEDA ALLESTIMENTO AEROGRAFO: pressione aria 2,0 bar o come indicato
CONFIGURACIONES DE PISTOLAS: Presión a la entrada de la pistola 2.0 bar o según lo indicado

LESONAL



		P1 (Trans-Tech)	H1 (HVLP)	T1 (Trans-Tech)	T2 (Trans-Tech)	T110 (Trans-Tech)	HS1 (HVLP)	TS1 (Trans-Tech)
Primers	1k Etch Primer	1.4 mm	PRi	PRi	PRi	PRi	-	0.8 mm
	1k Multi Plastic Primer	1.4 mm	PRi	PRi	PRi	PRi	-	0.8 mm
	2k Epoxy Primer	1.8 mm	PRi	PRi	PRi	PRi	-	1.2 mm
Fillers	2k Filler 540	1.8 mm	PRi	PRi	PRi	PRi	-	1.2 mm
	2k High Build Filler	1.8 mm	PRi	PRi	PRi	PRi	-	1.2 mm
	2k HS Primer Filler	1.8 mm	PRi	PRi	PRi	PRi	-	1.2 mm
Non Sanding Primer	2k Filler 540 wet-on-wet	1.4 mm	PRi	1.3 mm	PRi	1.3 mm	-	0.8 mm
2k Single Stage	Topcoat HS 420	-	1.3 mm	1.3 mm	1.3 mm	1.3 mm	-	0.8 mm
Solventborne Basecoat	Basecoat SB	-	1.3 mm	1.3 mm	-	1.3 mm	0.8 mm	0.8 mm
Waterborne Basecoat	Basecoat WB	-	1.3 mm	-	-	-	0.8 mm	0.8 mm
Clearcoats	2k HS Premium Clear 420	-	-	1.3 mm	1.3 mm	1.3 mm	-	0.8 mm
	2k HS Fast Clear 420	-	-	1.3 mm	1.3 mm	1.3 mm	-	0.8 mm

DeVilbiss Automotive Refinishing UK: +44 (0) 1202 571111 F: +33 (0) 4 75 75 27 80 D: +49 (0) 6074 403 251 Web: http://www.devilbisseu.com

DeVILBISS iSYSTEM PRO

SPRAY GUN SET UP SELECTOR: Gun Inlet Pressure 2.0 bar or as stated
LACKDATENBLATT: Eingangsdruck: ca. 2.0 bar wie unten angegeben
PISTOLET ET TABLEAU DES REGLAGES: Pression à l'entrée du pistolet 2.0 bar ou comme indiqué
SCHEDA ALLESTIMENTO AEROGRAFO: pressione aria 2,0 bar o come indicato
CONFIGURACIONES DE PISTOLAS: Presión a la entrada de la pistola 2.0 bar o según lo indicado

MaxMeyer CAR REFINISHING



CATEGORY	MATERIAL	PRIMER	BASE	CLEAR	BASE	CLEAR	SMART
PRIMERS	Ecophos Primer 6020 1K Plastiprimer 1.823.1500 CFE Primer 7050 1.815.7050 1.856.3504	P1-1.4 P1-1.4 P1-1.4 P1-1.4 P1-1.4/1.6	-	-	-	-	HS1-0.8/1.0 TS1-0.8/1.0
FILLERS	HP Epoxy Primer 1.855.990 HP Multigrey Filler 1.814.8700/8800/8900	P1-1.6/1.8	-	-	-	-	-
NON SANDING PRIMER	HP Wet on Wet Primer 1.841.9101/9104/9106	P1-1.4	-	TE10-1.3	-	T1-1.3/1.4	HS1-0.8/1.0 TS1-0.8/1.0
2K SINGLE STAGE	UHS Duralit Extra 1.150. XXXX	-	-	TE10-1.2/1.3 TE20-1.2/1.3	-	T1-1.2/1.3 T2-1.2/1.3	HS1-0.8/1.0 TS1-0.8/1.0
SOLVENTBORNE BASECOAT	MaxiCar HS Basecoat 1.180/181.XXXX	-	TE10-1.2/1.3 TE20-1.2/1.3 HV30-1.2/1.3 @ 1.75 Bar	-	H1-1.2/1.3 T1-1.2/1.3	-	HS1-0.8/1.0 TS1-0.8/1.0
WATERBORNE BASECOAT	Aquamax Basecoat 1.500/1550 XXXX	-	TE10-1.2/1.3 TE20-1.2/1.3 HV30-1.2/1.3 @ 1.75 Bar	-	H1-1.2/1.3 T1-1.2/1.3	-	HS1-0.8/1.0 TS1-0.8/1.0
Clearcoats	HP Clear 1.360.0900 HP Clear UHS 1.360.0950 HS Clear 0300 1.360.0300 1.360.0350 1.360.0340	-	-	TE10-1.2/1.3 TE20-1.2/1.3	-	T1-1.2/1.3 T2-1.2/1.3	HS1-0.8/1.0 TS1-0.8/1.0

DeVILBISS
i system pro

SPRAY GUN SET UP SELECTOR: Gun Inlet Pressure 2.0 bar or as stated
LACKDATENBLATT: Eingangsdruck: ca. 2.0 bar wie unten angegeben
PISTOLET ET TABLEAU DES REGLAGES: Pression à l'entrée du pistolet 2.0 bar ou comme indiqué
SCHEDA ALLESTIMENTO AEROGRAFO: pressione aria 2,0 bar o come indicato
CONFIGURACIONES DE PISTOLAS: Presión a la entrada de la pistola 2.0 bar o según lo indicado

mipa®
Professional Coating Systems



CATEGORY	MATERIAL	PRIMER	BASE	CLEAR	BASE	CLEAR	SMART
TOPCOATS	Mipa OC 2K-HS-Acryl-Decklack	-	-	TE10 1,2-1,3mm	-	T2/T110 1,2-1,3MM	-
	Mipa PUR HS 2K-Acryl-Decklack	-	-	TE10 1,2-1,3mm	-	T2/T110 1,2-1,3MM	-
BASECOATS	Mipa BC 2-Schicht-Basislack	-	TE10 1,2-1,3mm	-	T110 1,2-1,3mm	-	HS1/TS1 1,0-1,2mm
	Mipa WBC 2-Schicht-Wasserbasislack	-	TE10 1,2-1,3mm	-	T110 1,2-1,3mm	-	HS1/TS1 1,2mm
CLEARCOATS	Mipa 2K-HS-Klarlack C420	-	-	TE10 1,2-1,3mm	-	T2/T110 1,2-1,3mm	HS1/TS1 1,0-1,2mm
	Mipa 2K-HS-Klarlack CC4	-	-	TE10 1,2-1,3mm	-	T2/T110 1,2-1,3MM	HS1/TS1 1,0-1,2mm
	Mipa 2K-HS-Klarlack CC6	-	-	TE10 1,2-1,3mm	-	T2/T110 1,2-1,3MM	HS1/TS1 1,0-1,2mm
	Mipa 2K-HS-Klarlack CX3	-	-	TE10 1,2-1,3mm	-	T2/T110 1,2-1,3mm	HS1/TS1 1,0-1,2mm
	Mipa 2K-HS-Klarlack CX1	-	-	TE10 1,2-1,3mm	-	T2/T110 1,2-1,3mm	HS1/TS1 1,0-1,2mm
	Mipa 2K-HS-Klarlack CS85	-	-	TE10 1,2-1,3mm	-	T2/T110 1,2-1,3mm	HS1/TS1 1,0-1,2mm
	Mipa 2K-HS-Klarlack CS44	-	-	TE10 1,2-1,3mm	-	T2/T110 1,2-1,3mm	HS1/TS1 1,0-1,2mm
	Mipa 2K-HS-Klarlack C85	-	-	TE10 1,2-1,3mm	-	T2/T110 1,2-1,3mm	HS1/TS1 1,0-1,2mm
	Mipa 2K-MS-Klarlack C75	-	-	TE10 1,2-1,3mm	-	T2/T110 1,2-1,3mm	HS1/TS1 1,0-1,2mm

DeVilbiss Automotive Refinishing UK: +44 (0) 1202 571111 F: +33 (0) 4 75 75 27 80 D: +49 (0) 6074 403 251 Web: http://www.devilbisseu.com

DeVILBISS
i system pro

SPRAY GUN SET UP SELECTOR: Gun Inlet Pressure 2.0 bar or as stated
LACKDATENBLATT: Eingangsdruck: ca. 2.0 bar wie unten angegeben
PISTOLET ET TABLEAU DES REGLAGES: Pression à l'entrée du pistolet 2.0 bar ou comme indiqué
SCHEDA ALLESTIMENTO AEROGRAFO: pressione aria 2,0 bar o come indicato
CONFIGURACIONES DE PISTOLAS: Presión a la entrada de la pistola 2.0 bar o según lo indicado

mipa®
Professional Coating Systems



CATEGORY	MATERIAL	PRIMER	BASE	CLEAR	BASE	CLEAR	SMART
PRIMER/FILLER	Mipa Rapidprimer / Rapidfiller	P1 1,4-1,6mm	-	-	-	-	-
	Mipa 2K-Primer CF	P1 1,4-1,6mm	-	-	-	-	-
	Mipa Aktivprimer	P1 1,4-1,6mm	-	-	-	-	-
	Mipa 2K-Primer AZ	P1 1,4-1,6mm	-	-	-	-	-
	Mipa 2K-Acryl-Grundierfiller 10:1	P1 1,6-1,8mm	-	-	-	-	-
	Mipa 2K-HS-Fillprimer	P1 1,3mm	-	TE10 1,3mm	-	T2/T110 1,3mm	-
	Mipa 4+1 Acrylfiller HS	P1 1,6-1,8mm	-	-	-	-	-
	Mipa F41 2K-HS-Filler	P1 1,6-1,8mm	-	-	-	-	-
	Mipa F31 2K-HS-Direktfiller	P1 1,4mm	-	-	-	-	-
	Mipa 2K-Plastic-Grundierfiller	P1 1,4mm	-	-	-	-	-
	Mipa 2K-EP-Grundierfiller	P1 1,6mm	-	-	-	-	-
	Mipa 1K-Kunststoffprimer	-	-	TE10 1,2mm	-	T2/T110 1,2mm	-

DeVILBISS iSYSTEM PRO

SPRAY GUN SET UP SELECTOR: Gun Inlet Pressure 2.0 bar or as stated
LACKDATENBLATT: Eingangsdruck: ca. 2.0 bar wie unten angegeben
PISTOLET ET TABLEAU DES REGLAGES: Pression à l'entrée du pistolet 2.0 bar ou comme indiqué
SCHEDA ALLESTIMENTO AEROGRAFO: pressione aria 2,0 bar o come indicato
CONFIGURACIONES DE PISTOLAS: Presión a la entrada de la pistola 2.0 bar o según lo indicado

NEXA AUTOCOLOR



CATEGORY	MATERIAL	PRIMER	BASE	CLEAR	BASE	CLEAR	SMART
PRIMERS	P565-9850 Chromate Free Etch Primer P565-9868 Chromate Free Wash Etch Primer P572-2001/2004 Priming Plastic Substrates	P1-1.4	-	-	-	-	HS1-0.8/1.0 TS1-0.8/1.0
FILLERS	P565-888/889 Fast High Build Surfacer/Filler P565-5601/05/07 HS Plus Primer Filler	P1-1.6/1.8	-	-	-	-	-
NON SANDING PRIMER	P565-3030/3031 Fast HS Wet on Wet Primer	P1-1.4	-	TE10-1.3	-	T1-1.3/1.4	HS1-0.8/1.0 TS1-0.8/1.0
2K SINGLE STAGE	2K HS Plus P471- Single Layer Solid Colour System	-	-	TE10-1.2/1.3 TE20-1.2/1.3	-	T1-1.2/1.3 T2-1.2/1.3	HS1-0.8/1.0 TS1-0.8/1.0
SOLVENTBORNE BASECOAT	2K P422-Low VOC Basecoat	-	TE10-1.2/1.3 TE20-1.2/1.3 HV30-1.2/1.3 @ 1.75 Bar	-	H1-1.2/1.3 T1-1.2/1.3	-	HS1-0.8/1.0 TS1-0.8/1.0
WATERBORNE BASECOAT	Aquabase Plus	-	TE10-1.2/1.3 TE20-1.2/1.3 HV30-1.2/1.3 @ 1.75 Bar	-	H1-1.2/1.3 T1-1.2/1.3	-	HS1-0.8/1.0 TS1-0.8/1.0
Clearcoats	P190-6512 2K SR Ceramic Clearcoat P190-6659 2K HS Plus Express Clearcoat P190-6676 HS Plus Clearcoat P190-6680 2K HS Clearcoat P190-6690 2K HS Plus Clearcoat P190-7000 2K HS Clearcoat	-	-	TE10-1.2/1.3 TE20-1.2/1.3	-	T1-1.2/1.3 T2-1.2/1.3	HS1-0.8/1.0 TS1-0.8/1.0

DeVilbiss Automotive Refinishing UK: +44 (0) 1202 571111 F: +33 (0) 4 75 75 27 80 D: +49 (0) 6074 403 251 Web: http://www.devilbisseu.com

DeVILBISS
i system pro

SPRAY GUN SET UP SELECTOR: Gun Inlet Pressure 2.0 bar or as stated
LACKDATENBLATT: Eingangsdruck: ca. 2.0 bar wie unten angegeben
PISTOLET ET TABLEAU DES REGLAGES: Pression à l'entrée du pistolet 2.0 bar ou comme indiqué
SCHEDA ALLESTIMENTO AEROGRAFO: pressione aria 2,0 bar o come indicato
CONFIGURACIONES DE PISTOLAS: Presión a la entrada de la pistola 2.0 bar o según lo indicado

NOVOL



CATEGORY	MATERIAL	PRIMER	BASE	CLEAR	BASE	CLEAR	SMART
POLYESTER	POLYESTER SPRAY FILLER	P1-2.5	-	-	-	-	-
WASH PRIMER	PROTECT 340	-	-	TE10 - 1.2/1.3 (1.5 - 2.0 bar)	-	-	-
EPOXY PRIMER WET-ON-WET	PROTECT 360 1:1	-	-	TE10 - 1.4 (2.0 - 2.5 bar)	-	-	-
EPOXY PRIMER	PROTECT 360 4:1 + 10%	P1 - 2.5	-	-	-	-	-
	PROTECT 360 4:1 + 25%	P1 - 1.8/2.0	-	-	-	-	-
	PROTECT 360 4:1 + 50%	P1 - 1.6/1.8	-	-	-	-	-
NON SANDING PRIMER	PROTECT 330 WET-ON-WET	-	-	TE10/TE20 - 1.2/1.3 (1.5 - 2.0 bar)	-	-	-
FILLERS	PROTECT 300	P1 - 1.6/1.8 (1.5 - 2.0 bar)	-	-	-	-	-
	PROTECT 310	P1 - 1.8/2.0 (1.5 - 2.0 bar)	-	-	-	-	-
	PROTECT 330	P1 - 1.6/2.0 (1.5 - 2.0 bar)	-	-	-	-	-
	PROTECT 350	P1 - 1.6/2.0 (1.5 - 2.0 bar)	-	-	-	-	-
CLEARCOATS	NOVAKRYL 540/570/580/590	-	-	TE10/TE20 - 1.2/1.4	-	-	-
	NOVAKRYL 530 MAT	-	-	TE20 - 1.2/1.4	-	-	-

DeVilbiss Automotive Refinishing UK: +44 (0) 1202 571111 F: +33 (0) 4 75 75 27 80 D: +49 (0) 6074 403 251 Web: http://www.devilbisseu.com

DeVILBISS i system pro

SPRAY GUN SET UP SELECTOR: Gun Inlet Pressure 2.0 bar or as stated
LACKDATENBLATT: Eingangsdruck: ca. 2.0 bar wie unten angegeben
PISTOLET ET TABLEAU DES REGLAGES: Pression à l'entrée du pistolet 2.0 bar ou comme indiqué
SCHEDA ALLESTIMENTO AEROGRAFO: pressione aria 2,0 bar o come indicato
CONFIGURACIONES DE PISTOLAS: Presión a la entrada de la pistola 2.0 bar o según lo indicado

OCTORAL CAR PAINTS



		P1 (Trans-Tech)	H1 (HVLP)	T1 (Trans-Tech)	T2 (Trans-Tech)	T110 (Trans-Tech)	HS1 (HVLP)	TS1 (Trans-Tech)
WASH PRIMER	PW170	1.6 - 1.8 mm	-	-	1.3 - 1.4 mm	-	-	-
EPOXY PRIMER	PE130 white & grey	1.6 - 1.8 mm	-	-	-	-	-	-
EPOXY PRIMER WET ON WET	PE130 white & grey	-	-	-	1.3 - 1.4 mm	-	-	-
HS SURFACER 2K	PF131 2K HS grey, white & black	1.6 - 1.8 mm	-	-	-	-	-	-
HS SURFACER 2K WET ON WET	PF131 2K HS grey, white & black	-	-	-	1.3 - 1.4 mm	-	-	-
WATERBASE TOPCOAT	Octobase Eco	-	-	1.3 mm	-	1.3 mm	-	-
CLEARCOAT	C150 2K HS	-	-	-	1.3 mm	-	-	-
	C248 HS420 gr/lt	-	-	-	1.2 - 1.3 mm	-	-	-
SOLID COLOUR 2K LD	Octocoat 2K HS 420 gr/lt	-	-	-	1.3 mm	-	-	-

DeVilbiss Automotive Refinishing UK: +44 (0) 1202 571111 F: +33 (0) 4 75 75 27 80 D: +49 (0) 6074 403 251 Web: http://www.devilbisseu.com

DeVILBISS
i system pro

SPRAY GUN SET UP SELECTOR: Gun Inlet Pressure 2.0 bar or as stated
LACKDATENBLATT: Eingangsdruck: ca. 2.0 bar wie unten angegeben
PISTOLET ET TABLEAU DES REGLAGES: Pression à l'entrée du pistolet 2.0 bar ou comme indiqué
SCHEDA ALLESTIMENTO AEROGRAFO: pressione aria 2,0 bar o come indicato
CONFIGURACIONES DE PISTOLAS: Presión a la entrada de la pistola 2.0 bar o según lo indicado

PPG AUTO REFINISH



CATEGORY	MATERIAL	PRIMER	BASE	CLEAR	BASE	CLEAR	SMART
PRIMERS	D8092 Universal Etch Primer	P1-1.4	-	-	-	-	HS1-0.8/1.0 TS1-0.8/1.0
FILLERS	D8010/D8015/D8017 Rapid Greymatic Primer D8018/D8019/D8024 Greymatic Primer	P1-1.6/1.8	-	-	-	-	-
NON SANDING PRIMER	D8501/D8505/D8507 HS Wet on Wet Primer	P1-1.4	-	TE10-1.3	-	T1-1.3/1.4	HS1-0.8/1.0 TS1-0.8/1.0
2K SINGLE STAGE	UHS Deltron Progress	-	-	TE10-1.2/1.3 TE20-1.2/1.3	-	T1-1.2/1.3 T2-1.2/1.3	HS1-0.8/1.0 TS1-0.8/1.0
SOLVENTBORNE BASECOAT	Deltron Basecoat	-	TE10-1.2/1.3 TE20-1.2/1.3 HV30-1.2/1.3 @ 1.75 Bar	-	H1-1.2/1.3 T1-1.2/1.3	-	HS1-0.8/1.0 TS1-0.8/1.0
WATERBORNE BASECOAT	Envirobase High Performance	-	TE10-1.2/1.3 TE20-1.2/1.3 HV30-1.2/1.3 @ 1.75 Bar	-	H1-1.2/1.3 T1-1.2/1.3	-	HS1-0.8/1.0 TS1-0.8/1.0
CLEARCOATS	D8105 CeramiClear D8113 Matt Clearcoat D8122 CeramiClear D8135 UHS Rapid Clearcoat D8138/D8171 UHS Premium Clearcoat D8141 UHS Clearcoat	-	-	TE10-1.2/1.3 TE20-1.2/1.3	-	T1-1.2/1.3 T2-1.2/1.3	HS1-0.8/1.0 TS1-0.8/1.0

DeVilbiss Automotive Refinishing UK: +44 (0) 1202 571111 F: +33 (0) 4 75 75 27 80 D: +49 (0) 6074 403 251 Web: http://www.devilbisseu.com

DeVILBISS iSYSTEM PRO

SPRAY GUN SET UP SELECTOR: Gun Inlet Pressure 2.0 bar or as stated
LACKDATENBLATT: Eingangsdruck: ca. 2.0 bar wie unten angegeben
PISTOLET ET TABLEAU DES REGLAGES: Pression à l'entrée du pistolet 2.0 bar ou comme indiqué
SCHEDA ALLESTIMENTO AEROGRAFO: pressione aria 2,0 bar o come indicato
CONFIGURACIONES DE PISTOLAS: Presión a la entrada de la pistola 2.0 bar o según lo indicado

R-M®



CATEGORY	MATERIAL	PRIMER	BASE	CLEAR	BASE	CLEAR	SMART
POLYESTER	STOP FILLER II	P1-2.5 @ 2.0 Bar	-	-	-	-	-
FILLERS	MULTI FILLER CP MULTI FILLER BLACK CP	P1-1.6/1.8 @ 2.0 Bar	-	-	-	-	-
	HYDROFILLER II	P1-1.6/1.8 @ 2.0 Bar	-	-	-	-	-
NON SANDING PRIMER	EXTRASEALER WHITE/ BLACK	P1-1.4 @2.0 Bar	-	TE10-1.3/1.4 @ 2.0 Bar TE20-1.3/1.4 @ 2.0 Bar HV30-14 @ 1.75 Bar	-	H1-1.3/1.4 @ 2.0 BAR T1-1.3/1.4 @ 2.2 BAR T2-1.3/1.4 @ 2.2 BAR T110-1.3/1.4 @ 2.0 BAR	-
2K SINGLE STAGE	UNO HD / UNO HD 420	-	-	TE10-1.3/1.4 @ 2.0 Bar TE20-1.3/1.4 @ 2.0 Bar HV30-14 @ 1.75 Bar	-	H1-1.3 @ 2.0 Bar T1-1.3/1.4 @ 2.2 Bar T2-1.3/1.4 @ 2.2 Bar T110-1.3/1.4 @ 2.0 Bar	HS1-1.0/1.2 @ 1.5-2.0 BAR TS1-1.0/1.2 @ 1.5-2.0 BAR
SOLVENTBORNE BASECOAT	DIAMONT	-	TE20-1.4 @ 2.0 BAR HV30-14 @ 1.75 BAR	-	H1-13/1.4 @ 2.0 BAR T2-1.3/1.4 @ 2.0 BAR	-	HS1-1.0/1.2 @ 1.5-2.0 BAR TS1-1.0/1.2 @ 1.5-2.0 BAR
WATERBORNE BASECOAT	ONYX HD	-	TE20-1.4 @ 2.0 BAR HV30-14 @ 1.75 BAR	-	H1-14 @ 2.0 BAR T2-1.4 @ 2.0 BAR	-	HS1-1.0/1.2 @ 1.5-2.0 Bar TS1-1.0/1.2 @ 1.5-2.0 Bar
CLEARCOATS	CHRONOTOP, DIAMONT MS, STARTOP HS, CRYSTALCLEAR CP, CHRONOLUX CP, SUPREMELUX CP	-	-	TE10-1.3/1.4 @ 2.0 BAR TE20-1.3/1.4 @ 2.0 BAR HV30-14 @ 1.75 BAR	-	H1-1.3 @ 2.0 BAR T1-1.3/1.4 @ 2.2 BAR T2-1.3/1.4 @ 2.2 BAR T110-1.3/1.4 @ 2.0 BAR	HS1-1.0/1.2 @ 1.5-2.0 Bar TS1-1.0/1.2 @ 1.5-2.0 Bar

DeVilbiss Automotive Refinishing UK: +44 (0) 1202 571111 F: +33 (0) 4 75 75 27 80 D: +49 (0) 6074 403 251 Web: http://www.devilbisseu.com

DeVILBISS

i system pro

SPRAY GUN SET UP SELECTOR: Gun Inlet Pressure 2.0 bar or as stated
LACKDATENBLATT: Eingangsdruck: ca. 2.0 bar wie unten angegeben
PISTOLET ET TABLEAU DES REGLAGES: Pression à l'entrée du pistolet 2.0 bar ou comme indiqué
SCHEDA ALLESTIMENTO AEROGRAFO: pressione aria 2,0 bar o come indicato
CONFIGURACIONES DE PISTOLAS: Presión a la entrada de la pistola 2.0 bar o según lo indicado

roberlo®



CATEGORY	MATERIAL	PRIMER	BASE	CLEAR	BASE	CLEAR	SMART
POLYESTER	A80 Sprayable polyester	P1-2,5@2.0 bar	-	-	-	-	-
WASH PRIMER	SURVINIL	P1-1,4@2.0 bar	-	TE10-1,3/1,4@2.0 bar TE20-1,3/1,4@2.0 bar	-	T1-1,3/1,4@2.0 bar T2-1,3/1,4@2.0 bar	HS1-1.0/1,2@1.5-2.0 bar TS1-1.0/1,2@1.5-2.0 bar
PRIMER	MEGAX High build	P1-1,8@2.0 bar	-	-	-	-	-
	MEGAX Surfacer	P1-1,4/1,6@2.0 bar	-	-	-	-	-
	MULTYFILLER PLUS	P1-1,6/1,8@2.0 bar	-	-	-	-	-
	MULTYFILLER EXPRESS	P1-1,6/1,8@2.0 bar	-	-	-	-	-
	VERSIS	P1-1,6/1,8@2.0 bar	-	-	-	-	-
	VERSIS w/w	P1-1,4@2.0 bar	-	TE10-1,3/1,4@2.2 bar TE20-1,3/1,4@2.2 bar	-	T1-1,3/1,4@2.2 bar T2-1,3/1,4@2.2 bar	-
	HYDRAX water base	P1-1,4@2.0 bar	TE10-1,3/1,4@2.0 bar TE20-1,3/1,4@2.0 bar		T1-1,3/1,4@2.0 bar		HS1-1.0/1,2@1.5-2.0 bar TS1-1.0/1,2@1.5-2.0 bar
WATERBORNE BASECOAT	OPABASE ACQUA		TE10-1,3@2.0 bar HV30-1,3@1.7 bar		T1-1,3@2.0 bar H1-1,3@1.7 bar		HS1-1.0/1,2@1.5-2.0 bar TS1-1.0/1,2@1.5-2.0 bar
SOLVENTBORNE BASECOAT	DICROM		TE10-1,3@2.0 bar HV30-1,3@1.7 bar		T1-1,3@2.0 bar H1-1,3@1.7 bar		HS1-1.0/1,2@1.5-2.0 bar TS1-1.0/1,2@1.5-2.0 bar
CLEAR LOW V.O.C.	KRONOX 3100 UHS	-	-	TE10-1,3/1,4@2.2 bar TE20-1,3/1,4@2.2 bar	-	T1-1,3/1,4@2.2 bar T2-1,3/1,4@2.2 bar	TS1-1.0/1,2@1.5-2.0 bar
	KRONOX 410 UHS/410 EXPRESS						
	KRONOX HS 420						
CLEAR	ELITE 350 HS						
	PREMIUM 250 HS						
	SUPERIOR 150 HS						
	VT141 EXPRESS			TE10-1,3/1,4@1.7 bar TE20-1,3/1,4@1.7 bar		T1-1,3/1,4@1.7 bar T2-1,3/1,4@1.7 bar	TS1-1.0/1,2@1.5-1.7 bar
2K SINGLE STAGE	DISOTRANS Low V.O.C.	-	-	TE10-1,3/1,4@2.2 bar TE20-1,3/1,4@2.2 bar	-	T1-1,3/1,4@2.2 bar T2-1,3/1,4@2.2 bar	-
	DISOLAC + 992						
	DISOLAC + 990						
	DISOLAC + 980						

DeVILBISS

i system pro

SPRAY GUN SET UP SELECTOR: Gun Inlet Pressure 2.0 bar or as stated
LACKDATENBLATT: Eingangsdruck: ca. 2.0 bar wie unten angegeben
PISTOLET ET TABLEAU DES REGLAGES: Pression à l'entrée du pistolet 2.0 bar ou comme indiqué
SCHEDA ALLESTIMENTO AEROGRAFO: pressione aria 2,0 bar o come indicato
CONFIGURACIONES DE PISTOLAS: Presión a la entrada de la pistola 2.0 bar o según lo indicado

R-M®



CATEGORY	MATERIAL	PRIMER	BASE	CLEAR	BASE	CLEAR	SMART	GPi
POLYESTER	STOP FILLER II	P1-2.5 @ 2.0 Bar	-	-	-	-	-	-
FILLERS	MULTI FILLER CP MULTI FILLER BLACK CP	P1-1.6/1.8 @ 2.0 Bar	-	-	-	-	-	-
	HYDROFILLER II	P1-1.6/1.8 @ 2.0 Bar	-	-	-	-	-	1.6 - 1.8 @ 2.0 BAR
	PERFECTFILLER GREY / WHITE / BLACK	P1-1.6/1.8 @ 2.0 Bar	-	-	-	-	-	1.6 - 1.8 @ 2.0 BAR
NON SANDING PRIMER	EXTRASEALER WHITE/ BLACK	P1-1.4 @2.0 Bar	-	TE10-1.3/1.4 @ 2.0 Bar TE20-1.3/1.4 @ 2.0 Bar HV30-14 @ 1.75 Bar	-	H1-1.3/1.4 @ 2.0 BAR T1-1.3/1.4 @ 2.2 BAR T2-1.3/1.4 @ 2.2 BAR T110-1.3/1.4 @ 2.0 BAR	-	-
2K SINGLE STAGE	UNO HD / UNO HD CP	-	-	TE10-1.3/1.4 @ 2.0 Bar TE20-1.4 @ 2.0 Bar HV30-14 @ 1.75 Bar	-	H1-1.3 @ 2.0 Bar T1-1.3/1.4 @ 2.2 Bar T2-1.3/1.4 @ 2.2 Bar T110-1.3/1.4 @ 2.0 Bar	HS1-1.0/1.2 @ 1.5-2.0 BAR TS1-1.0/1.2 @ 1.5-2.0 BAR	-
SOLVENTBORNE BASECOAT	DIAMONT	-	TE20-1.4 @ 2.0 BAR HV30-14 @ 1.75 BAR	-	H1-13/1.4 @ 2.0 BAR T2-1.3/1.4 @ 2.0 BAR	-	HS1-1.0/1.2 @ 1.5-2.0 BAR TS1-1.0/1.2 @ 1.5-2.0 BAR	-
WATERBORNE BASECOAT	ONYX HD	-	TE20-1.4 @ 2.0 BAR HV30-14 @ 1.75 BAR	-	H1-14 @ 2.0 BAR T2-1.4 @ 2.0 BAR	-	HS1-1.0/1.2 @ 1.5-2.0 Bar TS1-1.0/1.2 @ 1.5-2.0 Bar	-
CLEARCOATS	CHRONOTOP, DIAMONT MS, STARTOP HS, CRYSTALCLEAR CP, CHRONOLUX CP, SUPREMELUX CP	-	-	TE10-1.3/1.4 @ 2.0 BAR TE20-1.3/1.4 @ 2.0 BAR HV30-14 @ 1.75 BAR	-	H1-1.3 @ 2.0 BAR T1-1.3/1.4 @ 2.2 BAR T2-1.3/1.4 @ 2.2 BAR T110-1.3/1.4 @ 2.0 BAR	HS1-1.0/1.2 @ 1.5-2.0 Bar TS1-1.0/1.2 @ 1.5-2.0 Bar	-

DeVilbiss Automotive Refinishing UK: +44 (0) 1202 571111 F: +33 (0) 4 75 75 27 80 D: +49 (0) 6074 403 251 Web: http://www.devilbisseu.com

DeVILBISS iSYSTEM PRO

SPRAY GUN SET UP SELECTOR: Gun Inlet Pressure 2.0 bar or as stated
LACKDATENBLATT: Eingangsdruck: ca. 2.0 bar wie unten angegeben
PISTOLET ET TABLEAU DES REGLAGES: Pression à l'entrée du pistolet 2.0 bar ou comme indiqué
SCHEDA ALLESTIMENTO AEROGRAFO: pressione aria 2,0 bar o come indicato
CONFIGURACIONES DE PISTOLAS: Presión a la entrada de la pistola 2.0 bar o según lo indicado

sikkens AkzoNobel



CATEGORY	MATERIAL	PRIMER	BASE	CLEAR	BASE	CLEAR	SMART
PRIMERS	Washprimer 1K CF 2K Plastic Primer	P1-1.4	-	-	-	-	HS1-0.8/1.0 TS1-0.8/1.0
FILLERS	Colorbuild Plus (Sanding) Primer Surfacer EP II	P1-1.6/2.0	-	-	-	-	-
NON SANDING PRIMER	Colorbuild Plus (Non sanding)	P1-1.4	-	TE10-1.3/1.4	-	TE10-1.3/1.4	HS1-0.8/1.0 TS1-0.8/1.0
2K SINGLE STAGE	Autocryl Plus LV MM	-	-	TE10-1.3 TE20-1.3	-	T110-1.3 T2-1.3	HS1-0.8/1.0 TS1-0.8/1.0
WATERBORNE BASECOAT	Autowave MM 2.0	-	TE10-1.3/1.4	-	T110-1.3/1.4	-	HS1-0.8/1.0 TS1-0.8/1.0
	Autowave MM	-	TE10-1.3 HV30-1.3 @ 1.75 Bar	-	H1-1.3 T110-1.3	-	HS1-0.8/1.0 TS1-0.8/1.0
CLEARCOATS	Autoclear LV Exclusive Autoclear LV Superior Autoclear Mix & Mat Autoclear UV Autoclear WB	-	-	TE10-1.3 /1.4 TE20-1.3	-	T110-1.3 T2-1.3	HS1-0.8/1.0 TS1-0.8/1.0

DeVilbiss Automotive Refinishing UK: +44 (0) 1202 571111 F: +33 (0) 4 75 75 27 80 D: +49 (0) 6074 403 251 Web: http://www.devilbisseu.com

DeVILBISS iSYSTEM PRO

SPRAY GUN SET UP SELECTOR: Gun Inlet Pressure 2.0 bar or as stated
LACKDATENBLATT: Eingangsdruck: ca. 2.0 bar wie unten angegeben
PISTOLET ET TABLEAU DES REGLAGES: Pression à l'entrée du pistolet 2.0 bar ou comme indiqué
SCHEDA ALLESTIMENTO AEROGRAFO: pressione aria 2,0 bar o come indicato
CONFIGURACIONES DE PISTOLAS: Presión a la entrada de la pistola 2.0 bar o según lo indicado

silco®



CATEGORY	MATERIAL	PRIMER	BASE	CLEAR	BASE	CLEAR	SMART
PRIMERS	Epoxy Primer 2110	1,4 - 1,6	-	1,3 - 1,4	-	1,3 - 1,4	-
		-	-	-	-	-	-
		-	-	-	-	-	-
FILLERS	2K Polyester Spray Filler 8080	2,0 - 2,5	-	-	-	-	-
	HS Filler - Primer 7900	1,6 - 2,5	-	1,3 - 1,4	-	1,3 - 1,4	-
	HS Filler Qick Fill 3900	1,4 - 1,8	-	1,3 - 1,4	-	1,3 - 1,4	-
	WB Filler 1K grey	1.4	-	1,2 - 1,3	-	1,2 - 1,3	1.0
2k Single Stage Solventborne Basecoat	S.Mix 84	-	-	1,3 -1,4	-	1,3 - 1,4	-
		-	-	-	-	-	-
Waterborne Basecoat		-	-	-	-	-	-
		-	-	-	-	-	-
Clearcoats	Clear Coat Maxx 2	-	-	1,3 - 1,4	-	1,3 - 1,4	-
	Clear Coat Maxx 4	-	-	1,3 - 1,4	-	1,3 - 1,4	-
	Clear Coat UHS Maxx 8 Express	-	-	1,2 - 1,3	-	1,2 - 1,3	-
	Clear Coat UHS Maxx 8 Premium	-	-	1,2 - 1,3	-	1,2 - 1,3	-
	Clear Coat Maxx Matt	-	-	1,3 - 1,4	-	1,3 - 1,4	-

DeVilbiss Automotive Refinishing UK: +44 (0) 1202 571111 F: +33 (0) 4 75 75 27 80 D: +49 (0) 6074 403 251 Web: http://www.devilbisseu.com

DeVILBISS

i system pro

SPRAY GUN SET UP SELECTOR: Gun Inlet Pressure 2.0 bar or as stated
LACKDATENBLATT: Eingangsdruck: ca. 2.0 bar wie unten angegeben
PISTOLET ET TABLEAU DES REGLAGES: Pression à l'entrée du pistolet 2.0 bar ou comme indiqué
SCHEDA ALLESTIMENTO AEROGRAFO: pressione aria 2,0 bar o come indicato
CONFIGURACIONES DE PISTOLAS: Presión a la entrada de la pistola 2.0 bar o según lo indicado

SPECTRAL
COLOR TECHNOLOGY



CATEGORY	MATERIAL	PRIMER	BASE	CLEAR	BASE	CLEAR	SMART
WASH PRIMER	UNDER 345	-	-	TE10 - 1.2/1.3	-	T1 - 1.2/1.3 (1.5 - 2.0 Bar)	-
EPOXY PRIMER WET-ON-WET	UNDER 385	-	-	TE10 - 1.2 (1.5 Bar)	-	T1 - 1.2 (1.5 - 2.0 Bar)	-
NON SANDING PRIMER	UNDER 325 WET-ON-WET	-	-	TE20 - 1.3 (1.5 - 2.0 Bar)	-	T2 - 1.3 (1.5 - 2.0 Bar)	-
	UNDER 335 WET-ON-WET	-	-	TE10/TE20 - 1.2/1.3 (1.5 - 2.0 Bar)	-	T1/T2 - 1.2/1.3 (1.5 - 2.0 Bar)	-
	UNDER 365 WET-ON-WET	-	-	TE10/TE20 - 1.3 (1.5 - 2.0 Bar)	-	T1/T2 - 1.3 (1.5 - 2.0 Bar)	-
FILLERS	UNDER 335	P1 - 1.6/1.8 (1.5 - 2.0 bar)	-	-	-	-	-
	UNDER 355	P1 - 1.6/1.8 (1.5 - 2.0 bar)	-	-	-	-	-
	UNDER 365	P1 - 1.6/1.8 (1.5 - 2.0 bar)	-	-	-	-	-
2K SINGLE STAGE	SPECTRAL 2K	-	-	TE10/TE20 - 1.2/1.4	-	T110/T1/T2 - 1.2/1.4	-
SOLVENTBORNE BASECOAT	SPECTRAL BASE	-	HV30 - 1.3 (1.5 - 2.0 bar)	-	H1 - 1.3 (1.5 - 2.0 bar)	-	HS1 - 0.8 (1.5 - 2.0 bar)
WATERBORNE BASECOAT	SPECTRAL WAVE	-	HV30 - 1.3 (1.5 - 2.0 bar)	-	H1 - 1.3 (1.5 - 2.0 bar)	-	HS1 - 0.8 (1.5 - 2.0 bar)
CLEARCOATS	KLAR 505/555	-	-	TE10/TE20 - 1.2/1.3 (1.5 - 2.0 Bar)	-	T110/T1/T2 - 1.2/1.3	HS1 - 0.8 (1.5 - 2.0 bar)
	KLAR 565	-	-	TE10/TE20 - 1.2/1.3 (1.5 - 2.0 Bar)	-	T110/T1/T2 - 1.2/1.3	TS1 - 1.0 (1.5 - 2.0 bar)
	KLAR 575	-	-	TE10/TE20 - 1.2/1.4 (1.5 - 2.0 Bar)	-	T110/T1/T2 - 1.2/1.4	TS1 - 1.0 (1.5 - 2.0 bar)
	KLAR 535 MAT	-	-	TE20 - 1.2/1.4 (1.5 - 2.0 Bar)	-	T2 - 1.2/1.4	TS1 - 1.0 (1.5 - 2.0 bar)

DeVilbiss Automotive Refinishing UK: +44 (0) 1202 571111 F: +33 (0) 4 75 75 27 80 D: +49 (0) 6074 403 251 Web: http://www.devilbisseu.com

DeVILBISS iSYSTEM PRO

SPRAY GUN SET UP SELECTOR: Gun Inlet Pressure 2.0 bar or as stated
LACKDATENBLATT: Eingangsdruck: ca. 2.0 bar wie unten angegeben
PISTOLET ET TABLEAU DES REGLAGES: Pression à l'entrée du pistolet 2.0 bar ou comme indiqué
SCHEDA ALLESTIMENTO AEROGRAFO: pressione aria 2,0 bar o come indicato
CONFIGURACIONES DE PISTOLAS: Presión a la entrada de la pistola 2.0 bar o según lo indicado

SPIES HECKER



CATEGORY	MATERIAL	PRIMER	BASE	CLEAR	BASE	CLEAR	SMART
PRIMERS	Priomat® 1K Wash Primer 4075	P1-1.4	-	-	-	-	TS1-0.8
	Priomat® 1K Wash Primer 4085	P1-1.4	-	-	-	-	TS1-0.8
	Permacron® Elastic Primer Surfacer 3300	P1-1.4	-	-	-	-	TS1-0.8
FILLERS	Permasolid® HS Express Surfacer 5250	P1-1.6/1.8	-	-	-	-	TS1-1.0/1.2
	Permasolid® HS Performance Surfacer 5320	P1-1.6/1.8	-	-	-	-	TS1-1.0/1.2
NON SANDING PRIMER	Permasolid® HS Vario Primer Surfacer 5340	P1-1.4	TE10-13	TE10-13	T1-13	T1-13	TS1-0.8
2K SINGLE STAGE	Permasolid® Automotive Top Coat Series 275	-	TE20-1.2/1.3	TE20-1.2/1.3	T2-1.2/1.3	T2-1.2/1.3	HS1/TS1-0.8/1.0
SOLVENTBORNE BASECOAT	Permacron® Base Coat Series 293/295	-	TE20-1.2/1.3	-	T2-1.2/1.3	-	HS1/TS1-0.8/1.0
WATERBORNE BASECOAT	Permahyd® Basecoat Series 280/285	-	TE20-1.2/1.3	-	T2-1.2/1.3	-	HS1/TS1-0.8/1.0
	Permahyd® Hi-TEC Basecoat 480	-	TE20-1.2/1.3	-	T2-1.2/1.3	-	HS1/TS1-0.8/1.0
CLEARCOATS	Permasolid® HS Clear Coat 8034	-	-	TE10-1.3	-	T2-1.3	HS1/TS1-0.8/1.0
	Permasolid® HS Clear Coat 8055	-	-	TE10-1.3	-	T2-1.3	HS1/TS1-0.8/1.0
	Permasolid® HS Diamond Clear Coat 8450	-	-	TE10-1.3	-	T2-1.3	HS1/TS1-0.8/1.0
	Permasolid® HS Optimum Plus Clear 8650	-	-	TE10-1.3	-	T2-1.3	HS1/TS1-0.8/1.0
	Permasolid® HS Speed Clear Coat 8800	-	-	TE10-1.3	-	T2-1.3	HS1/TS1-0.8/1.0

DeVilbiss Automotive Refinishing UK: +44 (0) 1202 571111 F: +33 (0) 4 75 75 27 80 D: +49 (0) 6074 403 251 Web: http://www.devilbisseu.com

DeVILBISS

i system pro

SPRAY GUN SET UP SELECTOR: Gun Inlet Pressure 2.0 bar or as stated
LACKDATENBLATT: Eingangsdruck: ca. 2.0 bar wie unten angegeben
PISTOLET ET TABLEAU DES REGLAGES: Pression à l'entrée du pistolet 2.0 bar ou comme indiqué
SCHEDA ALLESTIMENTO AEROGRAFO: pressione aria 2,0 bar o come indicato
CONFIGURACIONES DE PISTOLAS: Presión a la entrada de la pistola 2.0 bar o según lo indicado

STANDOX



CATEGORY	MATERIAL	PRIMER	BASE	CLEAR	BASE	CLEAR	SMART
PRIMERS	Etching Adhesion Primer	P1-1.4	-	-	-	-	TS1-0.8
	1K Primer Filler	P1-1.4	-	-	-	-	TS1-0.8
	Standoflex® 2KPrimer Surfacer U3020	P1-1.4	-	-	-	-	TS1-0.8
FILLERS	VOC XTRA Filler U7560	P1-1.6/1.8	-	-	-	-	TS1-1.0/1.2
	VOC Pro Filler	P1-1.6/1.8	-	-	-	-	TS1-1.0/1.2
NON SANDING PRIMER	VOC Non Stop Primer Surfacer U7580	P1-1.4	TE10-13	TE10-13	T1-13	T1-13	TS1-0.8
2K SINGLE STAGE	Standocryl® VOC Topcoat	-	TE20-1.2/1.3	TE20-1.2/1.3	T2-1.2/1.3	T2-1.2/1.3	HS1/TS1-0.8/1.0
SOLVENTBORNE BASECOAT	Standox Basecoat	-	TE20-1.2/1.3	-	T2-1.2/1.3	-	HS1/TS1-0.8/1.0
WATERBORNE BASECOAT	Standohyd® Basecoat	-	TE20-1.2/1.3	-	T2-1.2/1.3	-	HS1/TS1-0.8/1.0
	Standoblue® Basecoat	-	TE20-1.2/1.3	-	T2-1.2/1.3	-	HS1/TS1-0.8/1.0
CLEARCOATS	Standocryl® VOC Express Clear K9530	-	-	TE10-1.3	-	T2-1.3	HS1/TS1-0.8/1.0
	Standocryl® VOC 2K Clear K9550	-	-	TE10-1.3	-	T2-1.3	HS1/TS1-0.8/1.0
	Standocryl® VOC Xtra Clear K9560	-	-	TE10-1.3	-	T2-1.3	HS1/TS1-0.8/1.0
	Standocryl® VOC Platinum Clear K9570	-	-	TE10-1.3	-	T2-1.3	HS1/TS1-0.8/1.0
	Standocryl® VOC Xtreme Clear K9580	-	-	TE10-1.3	-	T2-1.3	HS1/TS1-0.8/1.0

DeVilbiss Automotive Refinishing UK: +44 (0) 1202 571111 F: +33 (0) 4 75 75 27 80 D: +49 (0) 6074 403 251 Web: http://www.devilbisseu.com

CONDITIONS OF SALE
FINISHING BRANDS UK LIMITED ("FBUK")

1. INTERPRETATION

1.1 In these Conditions:

Business Day: a day (other than a Saturday, Sunday or public holiday) when banks in London are open for business.

Buyer: Is the person who accepts FBUK's quotation or whose order is accepted by FBUK.

Conditions: Are these conditions of sale and (unless the context otherwise requires) includes any special terms on the face of FBUK's quotation or acceptance of the Buyer's order.

Contract: Is the contract for the purchase and sale of the Goods and/or supply of services.

Goods: Are the goods which FBUK is to supply.

2. BASIS OF THE SALE

2.1. Subject to FBUK's quotation, all Goods are sold and services supplied subject to these Conditions to the exclusion of any other terms and conditions.

2.2. No variation to these Conditions shall be binding unless agreed in writing by a general manager of FBUK.

2.3. FBUK's employees or agents are not authorised to make any representations unless confirmed by FBUK in writing. The Buyer acknowledges that it does not rely on, and irrevocably waives any claim it may have for damages for or the right to rescind the Contract for any such representations which are not so confirmed (unless such representations were fraudulently made).

2.4. Any advice or recommendation given by FBUK or its employees or agents to the Buyer or its employees or agents which is not confirmed in writing by FBUK is followed or acted upon entirely at the Buyer's own risk and FBUK shall not be liable for any such advice or recommendation which is not so confirmed.

2.5. Any typographical, clerical or other error or omission in any sales literature, quotation, price list, acceptance of offer, invoice or other document or information issued by FBUK shall be subject to correction without any liability on the part of FBUK.

3. ORDERS AND SPECIFICATIONS

3.1. Quotations are valid for 60 days only. No order submitted by the Buyer shall be deemed to be accepted by FBUK unless and until confirmed in writing by FBUK.

3.2. The Buyer is responsible for ensuring the accuracy of the terms of any order and for giving FBUK any necessary information within a sufficient time to enable FBUK to perform the Contract.

3.3. The quantity and description of and any specification for the Goods or services shall be those set out in FBUK's quotation (if accepted by the Buyer) or FBUK's acceptance of the Buyer's order.

3.4. FBUK reserves the right to make any changes in the specification of the Goods (including materials and components) which are required to conform with any applicable law or, which do not materially affect their quality or performance.

3.5. An order once accepted by FBUK may only be cancelled with its written agreement and the Buyer shall indemnify FBUK in full against all loss (including loss of profit), costs (including labour and materials) and damages incurred by FBUK.

4. DRAWINGS AND SPECIFICATIONS

4.1. Any specifications or drawings supplied remain FBUK's sole property and are subject to recall at any time before FBUK's quotation is accepted. Any drawings supplied are not to be used for construction purposes. Where FBUK's quotation includes a drawing reference, copy of any approved prints or equipment data sheets, these must be signed by the Buyer and must accompany the equipment purchase order.

4.2. Before signing the prints the Buyer shall check equipment size, location of building, and all interferences as shown on the drawings, data sheets etc and clearances and note clearly and comprehensively any changes or interferences on the prints.

4.3. If Goods are to be made or any process is to be applied in accordance with a specification, drawing or design submitted by the Buyer, the Buyer shall indemnify FBUK against all loss, damages, costs and expenses awarded against or incurred by FBUK in connection with or paid or agreed to be paid by FBUK in settlement of any claim for infringement of any third party rights which results from FBUK's use of such material.

4.4. If any claim is made against the Buyer that the Goods supplied or their proper use infringe the intellectual property rights of any other person, FBUK shall indemnify the Buyer against all damages, costs and expenses awarded against the Buyer in connection with the claim provided that:

4.4.1. FBUK is given full control of any proceedings or negotiations in connection with any such claim;

4.4.2. the Buyer shall pay to FBUK all damages and costs (if any) awarded in favour of the Buyer which are payable by, or agreed with the consent of the Buyer (which consent shall not be unreasonably withheld) to be paid by, any other party in respect of any such claim; and

4.4.3. without prejudice to any duty of the Buyer at common law, FBUK may require the Buyer to take such steps as FBUK may reasonably require to mitigate or reduce any such loss, damages, costs or expenses for which FBUK is liable to indemnify the Buyer under this condition.

5. PREPARATION OF SITE

5.1. The Buyer shall obtain all necessary licences, permits and permissions.

5.2. The Buyer shall clear the site for installation and make it ready for the reception of the Goods. The Buyer shall keep the site free from water, debris and obstructions, and make required alterations to buildings and other equipment if required for the proper clearance and support of the Goods.

5.3. The Buyer shall ensure that FBUK shall not be delayed by the operations of others (including the Buyer) or the Buyer's failure to provide the conditions and facilities required. If such delays cause extra visits by FBUK, these will be charged in addition.

5.4. The Buyer shall, at its own risk, unload the Goods and store them close to the point of erection, provide safe and convenient storage room for tools and materials, provide adequate work room for FBUK personnel, give proper care to and provide insurance against loss by fire and theft for all materials and equipment prior to, during and after installation.

6. INSTALLATION LIABILITY

6.1. The Buyer shall provide the necessary foundations required, carry out cutting away and making good, and grouting in foundation bolts etc, and will provide a level concrete floor for the plant of adequate strength. The Buyer shall be entirely responsible for the exact siting of the Goods to meet the Buyer's requirements.

6.2. All gas, water, electrical and compressed air services (including interconnecting wiring) shall be provided by the Buyer. All building work such as cutting holes etc for stacks to be undertaken by the Buyer.

6.3. If FBUK undertakes any of the work detailed in the previous paragraphs to complete installation, such work shall be charged in addition and FBUK shall not be responsible for any consequential damage.

7. PLANT ACCEPTANCE/TAKING OVER

7.1. The Goods shall be deemed to have been accepted at the earlier of:

7.1.1. When installation has been completed and the Goods have passed or are deemed to have passed all tests provided for in FBUK's proposal; or

7.1.2. One calendar month after the Goods shall have been put into use.

7.2. The time of acceptance shall not be delayed because of additions, minor omissions or defects which do not materially affect the use of the Goods or if the Buyer is preventing FBUK from completing the Contract.

8. PRICE

8.1. The price shall be FBUK's quoted price (or if a quoted price is no longer valid), the price stated in FBUK's acknowledgement of order. Prices are ex works.

8.2. FBUK may, by giving notice to the Buyer at any time before delivery, increase the price to reflect any increase in the cost to FBUK which is due to any factor beyond the control of FBUK.

8.3. Any applicable value added tax or other taxes or duties are payable by the Buyer in addition.

8.4. Goods for export will be packed in good quality export cases at the Buyer's cost. Any special packing requirements of the Buyer will attract an additional charge. Packing for parcel post or air freight will be in an appropriately economic manner using cartons and/or parcels.

9. TERMS OF PAYMENT

9.1. Payment shall be made in accordance with FBUK's quotation.

9.2. FBUK may recover the price, notwithstanding that delivery may not have taken place and the property in the Goods has not passed. The time of payment shall be of the essence of the Contract.

9.3. FBUK may charge the Buyer interest (both before and after any judgement) on the amount unpaid, at the rate of 4 per cent per annum above the base rate from time to time of HSBC Bank plc until payment in full is made.

10. DELIVERY

10.1. The method of delivery shall be in accordance with FBUK's quotation. The Buyer must obtain any import or export licences required.

10.2. Any dates given for delivery of the Goods or provision of services are approximate only and FBUK shall not be liable for any delay howsoever caused. Time for delivery or performance shall not be of the essence.

10.3. The Goods may be delivered in instalments. Each delivery shall constitute a separate contract and failure by FBUK to deliver any one or more of the instalments in accordance with these Conditions or any claim by the Buyer in respect of any one or more instalments shall not entitle the Buyer to treat the Contract as a whole as repudiated.

10.4. If the Buyer fails to take delivery of the Goods or fails to give FBUK adequate delivery instructions within 14 days of their availability FBUK may:

10.4.1. store the Goods until actual delivery and charge the Buyer for the costs (including insurance) of storage; or

10.4.2. sell the Goods at the best price readily obtainable and (after deducting all storage, selling and other expenses) account to the Buyer for the excess over sums owing by the Buyer or charge the Buyer for any shortfall.

10.5. Where FBUK arranges forwarding of the Goods, the Buyer shall notify FBUK and the carrier in writing within 48 hours of delivery of any damage to the Goods or shortage in delivery.

10.6. The Buyer shall inspect the Goods on receipt and notify FBUK of any defects within 7 days of delivery failing which the Buyer shall be deemed to have accepted them. After acceptance the Buyer shall not be entitled to reject Goods. The Buyer shall not be entitled to reject the Goods for any defect or failure which is so slight that it would be unreasonable to reject them.

11. RISK AND PROPERTY

11.1. Risk in the Goods shall pass to the Buyer when FBUK notifies the Buyer that the Goods are available for collection or when the Goods leave FBUK's premises, whichever is the earlier.

11.2. Notwithstanding any other provision of these Conditions, the property in the Goods shall not pass to the Buyer until FBUK has received in cash or cleared funds payment in full of all sums due under the Contract and all other contracts between the Buyer and FBUK (whether or not the sums due under those contracts are immediately due and payable). Until then the Buyer shall:

11.2.1. hold the Goods as FBUK's fiduciary agent and bailee, and shall keep them separate from all other goods and properly stored, protected and insured and identified as FBUK's property but may resell or use the Goods in the ordinary course of its business;

11.2.2. (provided the Goods are still in existence and have not been resold), deliver up the Goods to FBUK on demand

11.2.3. and, if the Buyer fails to do so immediately, FBUK may enter any premises of the Buyer or any third party where the Goods are stored and repossess the Goods.

12. WARRANTIES AND LIABILITIES

12.1. FBUK warrants that it holds unencumbered title to the Goods and will perform services with reasonable skill and care.

12.2. Subject to condition 12.3, FBUK warrants that the Goods will correspond with their specification at the time of delivery and will be free from defects in material and workmanship for 12 months from delivery.

12.3. The above warranty does not apply to any defect:

12.3.1. arising from any drawing, design or specification supplied by the Buyer;

12.3.2. arising from fair wear and tear, improper use, storage or installation or maintenance, failure to follow FBUK's instructions (whether oral or in writing), or alteration or repair of the Goods without FBUK's approval;

12.3.3. which is not immediately notified in writing to FBUK;

12.3.4. if any sum owing by the Buyer to FBUK has not been paid;

12.3.5. in items not manufactured by FBUK, when the Buyer shall only be entitled to the benefit of any such warranty as is given to FBUK by the manufacturer.

12.4. FBUK shall replace or repair free of charge the Goods (or the part in question) returned to FBUK's factory carriage paid which do not meet the warranty in condition 12.2 or, at FBUK's sole discretion, refund to the Buyer the price of the Goods (or a proportionate part of the price) but FBUK shall have no further liability to the Buyer. The warranty on replacements or repairs shall be to the end of the original warranty period. Repairs and replacements will be delivered free within the UK and to the nearest port or airport c.i.f. outside the UK.

12.5. Subject as expressly provided in these Conditions, all warranties, conditions, representations or other terms implied by statute or common law are excluded to the fullest extent permitted by law.

12.6. The following provisions set out FBUK's entire liability whether arising in contract, tort (including negligence), misrepresentation (other than fraudulent misrepresentation) or otherwise howsoever arising.

AND THE BUYER'S ATTENTION IS IN PARTICULAR DRAWN TO THE FOLLOWING PROVISIONS OF THIS CONDITION

12.7. To the extent the law does not permit such liability to be excluded:

12.7.1. FBUK's liability to the Buyer for death or injury resulting from its negligence shall not be limited;

12.7.2. FBUK accepts liability to the Buyer for damage to the tangible property of the Buyer resulting from the negligence of FBUK not exceeding £1,000,000 for any one incident or series of incidents arising from a common cause;

12.7.3. Save as otherwise expressly provided, FBUK's entire liability shall be limited to damages of an amount equal to the price due under the Contract.

12.8. Subject to condition 12.7.1 above, FBUK shall not be liable for any increased costs, expenses, loss of profits, goodwill, business, contracts, revenues or anticipated savings or any type of special indirect or consequential loss (including loss or damage suffered by the Buyer as a result of a claim by a third party) even if such loss was reasonably foreseeable or FBUK had been advised of the possibility of the Buyer incurring the same.

12.9. FBUK shall not be liable to the Buyer or be deemed to be in breach of the Contract by reason of any delay in performing, or any failure to perform, any of FBUK's obligations, if the delay or failure was due to any cause beyond FBUK's reasonable control including (without limitation) flood, fire, accident, transportation delays, strikes, war or threat of war, sabotage, civil disturbance or governmental action, disruption of supplies or services.

12.10. Save as otherwise expressly provided, the Buyer shall indemnify FBUK against any cost, claim, expense, loss or liability made by any person in connection with the Goods or their use.

13. INSOLVENCY AND BREACH

13.1. If the Buyer fails to make any payment when due or breaches any provision of the Contract; or FBUK reasonably apprehends that the solvency of the Buyer may be in jeopardy FBUK may cancel the Contract or suspend any further deliveries under the Contract without any liability to the Buyer, and if the Goods have been delivered but not paid for the price shall become immediately due and payable notwithstanding any previous agreement or arrangement to the contrary.

14. SAFETY, OPERATING AND MAINTENANCE INSTRUCTIONS

The Buyer's attention is directed to the instructions for use and cautionary notes supplied with the Goods, as well as other technical literature.

15. STANDARD OF COATING ATTAINED

The Buyer shall follow FBUK's instructions on operation and maintenance. FBUK accepts no responsibility for unsatisfactory results due to use of coating materials not recommended in writing by FBUK or whose composition or quality when supplied is different from that tested by FBUK when giving its recommendation.

16. GENERAL

16.1. FBUK may assign its rights and obligations. The Buyer may not assign its rights and obligations.

16.2. Any notice shall be in writing addressed to the addressee at its registered office or principal place of business or such other address as may have been notified by the party giving the notice.

16.3. Any notice is deemed to have been received:

16.3.1. if delivered personally, at the time of delivery; or

16.3.2. if sent by commercial courier, at the time of signature of the courier's delivery receipt; or

16.3.3. in the case of pre-paid first class post or recorded delivery, 9.00 am on the second Business Day after posting; or

16.3.4. in the case of airmail, 9.00 am on the fifth Business Day after posting.

16.4. No delay or failure by FBUK in enforcing or partially enforcing any provision of the Contract shall constitute a waiver of that provision or any other provision. No waiver by FBUK shall be considered as a waiver of any subsequent breach of the same or any other provision. No waiver by FBUK shall be effective unless in writing.

16.5. If any provision of these Conditions is held by any competent authority to be invalid or unenforceable in whole or in part the validity of the other provisions of these Conditions and the remainder of the provision in question shall not be affected.

16.6. These Conditions constitute the entire agreement between FBUK and the Buyer concerning the supply of the Goods and replace and supersede any prior arrangement, understanding, warranty or representation (other than any fraudulent misrepresentation).

16.7. FBUK's rights are cumulative and in addition to any rights available to it at common law.

16.8. The Contract shall be governed by the laws of England and Wales and, subject to clause, 16.9 the parties submit to the exclusive jurisdiction of the courts of England and Wales. For the avoidance of doubt, the United Nations Convention on the International Sale of Goods shall not apply to the Contract.

16.9. Nothing in these Conditions shall limit the right of FBUK to take proceedings against the Buyer in any other court of competent jurisdiction, nor shall the taking of proceedings in any one or more jurisdiction preclude the taking of proceedings in any other jurisdiction, whether concurrently or not, to the extent permitted by the law of such other jurisdiction.

16.10. No term of this contract shall be enforceable under the Contracts (Rights of Third Parties) Act 1999 by a third party.

16.11 These Conditions are drafted in the English language. If these Conditions are translated into any other language, the English language text shall prevail.

16.12 Any notice given under or in connection with the Contract shall be in the English language. All other documents provided under or in connection with the Contract shall be in the English language.

A guide to the DSEAR and ATEX Directives

What is DSEAR and ATEX?

The EU Directives 94/4/EC (ATEX 95) "Equipment for use in potentially explosive atmospheres" and the "Workplace directive" 1999/92/EC (ATEX 137) are the European directives, which ensure employers work practices and manufacturers of equipment used in potentially explosive atmospheres, are safe and do not create potential explosion hazards. In other words, its all about health and safety at work for workers who handle and work with flammable and dangerous materials, to ensure they are not at risk of an explosion from the equipment and work practices.

The ATEX directives are implemented into UK law by the regulations "Dangerous Substances and Explosive Atmospheres Regulations" known as DSEAR 2002 and the "Equipment and protective systems for use in potentially explosive atmospheres" regulations 1996. DSEAR became mandatory in July 2006. DSEAR is a legal Health and Safety requirement which is enforced by the HSE, local authorities and in part the fire service.

ATEX Compliance

As a manufacturer of equipment used in potentially explosive atmospheres, we comply with this directive by applying the CE mark along with the Explosion protection symbol (Ex) and other markings to show compliance of that product.

Each piece of equipment must be marked with information to enable the user to assess its suitability to be used in the environment it is intended to be used in. The equipment could be marked with the following;

- Name and address of Manufacturer
- The CE mark
- If the equipment has been certified by a Notified Body, their reference follows the CE mark
- Equipment model number/name/type
- Year of manufacture
- The Explosion protection Symbol (Ex)
- The equipment Group II and category 1, 2 or 3
- For Gas (G) e.g. Group 2, Cat 2 Gas

Workplace regulations DSEAR 2002

The ATEX 1999/92/EC workplace regulations are implemented in the UK through the DSEAR 2002 Regulations. The duties for employers and owners under DSEAR are;

- Carry out a risk assessment of work involving dangerous substances and eliminate or reduce any risks identified.
- Provide equipment and procedures for accidents and emergencies.
- Instruct and train employees.
- Areas where hazardous explosive atmospheres may occur are classified into zones and where necessary marked with a specified "EX" sign at their points of entry; (eg spray booths, mix rooms, paint stores etc).
- Provide equipment and protective systems which comply with ATEX Regulations appropriate for the Zone rating of the hazardous area.
- Document all the above in an Explosion Protection Document.

Typical Markings found on Hazardous Area Equipment

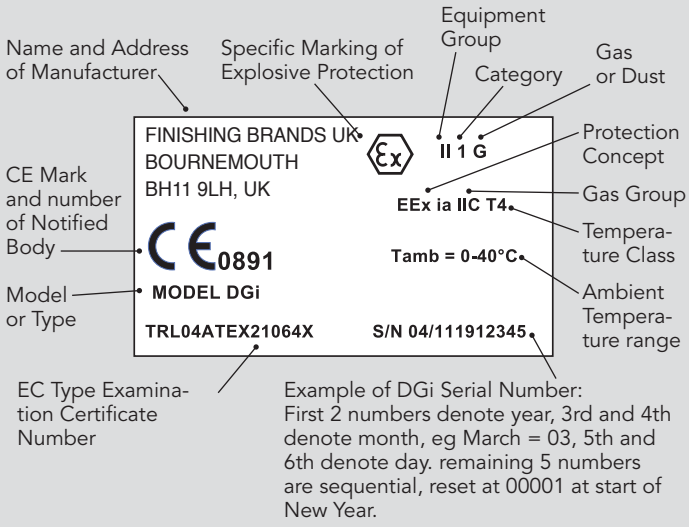

Typical Markings found on Sprayguns

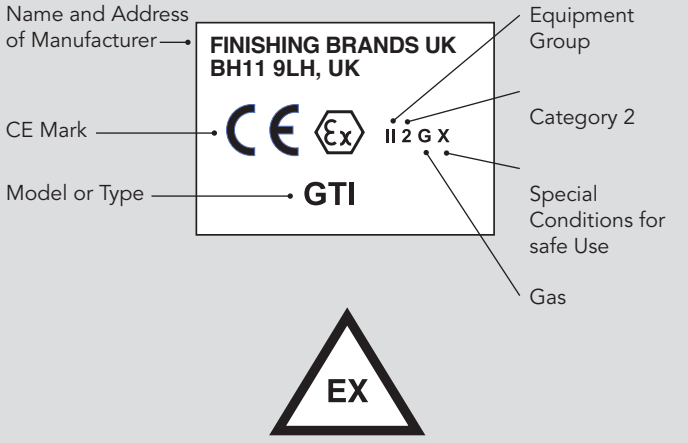

Avoidance of Hazards associated with Spraying flammable materials

The main hazard with spraying is electrostatic discharges and mechanically generated sparks. To avoid these ignition hazards, you should;

- Only use equipment CE marked to ATEX regulations. Most Finishing Brands Products are CE marked to ATEX eg Sprayguns, Digital Gauge, hoses. If in doubt, contact your distributor or Finishing Brands.
- The equipment must be installed and used in accordance with the instructions provided by the manufacturer(s).
- Ensure metallic parts of the equipment are earthed and bonded together (e.g. pressure feed tanks and pumps) to avoid potential differences between them. Metallic portable containers must be bonded and earthed. Check earth continuity at regular intervals. Keep earthing points clean.
- Use conductive air and fluid hoses to avoid static charging from air and fluid flows.
- Equip Operators with anti-static clothing and conductive footwear. Remove contaminated clothing if leaving the workplace into areas where ignitions hazards may occur e.g. smoking.
- Clean equipment with non-flammable liquids, or use safety cans with flame arrestors for use with flammable liquids.
- Removal of paint residues with scrapers made of plastic or non-sparking materials (steel scrapers can create sparks). Coat walls with strippable/ peelable coatings to avoid removal of residues by mechanical means.

More information can be found at the HSE DSEAR website: http://www.hse.gov.uk/fireandexplosion/dsear.htm



DeVILBISS®

AUTOMOTIVE REFINISHING

Ringwood Road, Bournemouth, Dorset, BH11 9LH
Tel: +44 (0) 1202 571111 Fax: +44 (0) 1202 590054
Email: info-uk@devilbisseu.com

Surfaces & Finitions,
163-171 Avenue des Auréats, BP1453,
26014 Valence Cedex.
Tel: +33 (0) 4 75 75 27 80 Fax: +33 (0) 4 75 75 27 59
Email: info-fr@devilbisseu.com

Finishing Brands Germany GmbH,
Justus-von-Liebig-Str. 31, D-63128 Dietzenbach.
Tel: +49 (0) 6074 403 251 Fax: +49 (0) 6074 403 300
Email: info-de@devilbisseu.com

INTELLIGENTLY DESIGNED
PRECISION ENGINEERED

www.devilbisseu.com